SmallRig

Cage (for Sony A6100 / A6300 / A6400 / A6500)

Operating Instruction

SmallRig Cage for Sony A6100 / A6300 / A6400 / A6500 CCS2310C is designed to protect the camera and provide multiple expansion interfaces. It securely locks the camera with one 1/4"-20 screw at the bottom and one M2 screw on the left side, ensuring stability without deviation. The cage features multiple 1/4"-20 holes, 3/8"-16 ARRI locating holes for attaching accessories like the top handle (ID 3765), side handle (ID 4016) for handheld shooting, assisting with focusing, enhancing shooting stability, and allowing for monitor expansion using the top ARRI locating hole for attaching the monitor mount (ID 2903B). It has built-in cold shoe mounts for attaching microphones, lights, and other accessories. The bottom utilizes an Arca-Swiss quick release plate, enabling swift transitions between DJI RS 2/RSC 2/RS 3/RS 3 Pro gimbals and tripod shooting. Holes on the left side and bottom of the cage are reserved for such accessories as hand strap (ID 3848), shoulder strap (ID PSC2428), etc. The bottom of the cage is equipped with a built-in magnetic Allen wrench for effortless assembly and disassembly.

Safety Guidelines

1. Environment

Do not use the product underwater, in extreme temperatures (e.g., freezing or direct heat), corrosive environments, or excessive dust. Dry metal parts immediately after liquid contact to prevent corrosion.

2. Load Capacity

Do not exceed the maximum weight capacity indicated on the product. Overloading risks structural failure, deformation, or accidental drops.

3. Cleaning & Maintenance

Clean surfaces with a dry, soft cloth. Avoid chemicals like alcohol or solvents. Ensure dry and ventilated conditions for long-term storage.

4. Structural Integrity

Do not modify the product (e.g., drilling, cutting)—this compromises structural integrity and increases drop risks.

5. Malfunctions

Stop use immediately if you notice deformation, unusual noises, or loose components, and contact support.

In the Box

Guarantee Card × 1

Cage × 1

Product Details

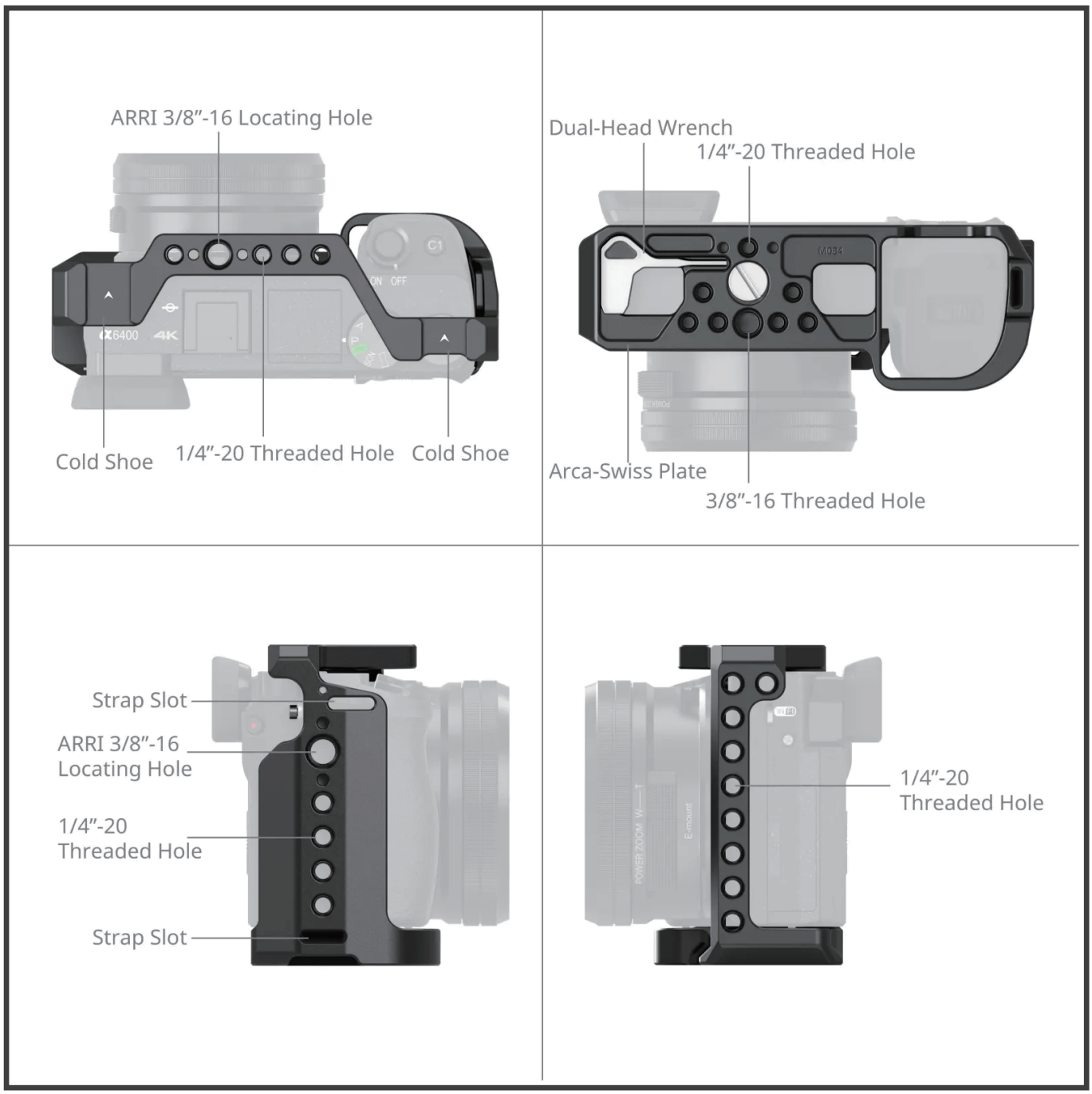

Extended

Anti-Twisting Design

Specifications

Package Includes:

1 x Cage

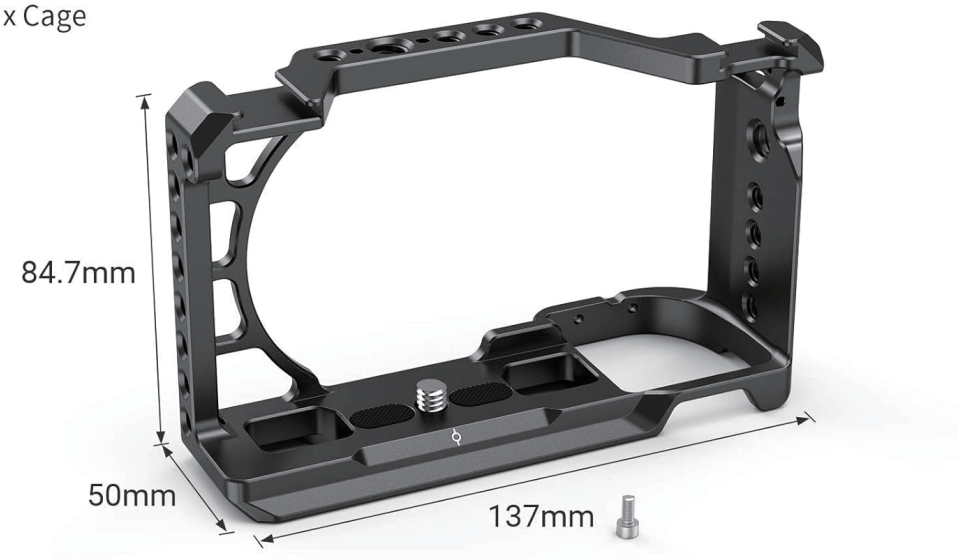

Product Parameter

ID	Net Weight	Material(s)
CCS2310B	140g	Aluminum Alloy

Compatibility	Product Dimensions
For Sony A6100/A6300/A6400/ A6500	137 X 50 X 84.7mm

Manufacturer Email: support@smallrig.com
Manufacturer: Shenzhen Leqi Innovation Co., Ltd.
Add: Rooms 101, 701, 901, Building 4, Gonglianfuji Innovation Park, No. 58, Ping'an Road, Dafu Community, Guanlan Street, Longhua District, Shenzhen, Guangdong, China.

Consignor: Shenzhen LC Co., Ltd.
Add: Room 201, Building 4, Gonglianfuji Innovation Park, No. 58, Ping'an Road, Dafu Community, Guanlan Street, Longhua District, Shenzhen, Guangdong, China.

RoHS CE 22 PAP 合格证 已检验

FR LE TRI FACILE Boîte 1 + Papier 5 BAC DE TRI

Séparez les éléments avant de trier

RECICLA Al Azul

Made in China