SmallRig

Cage Kit (for Canon EOS C80)

拓展框套件（适用于佳能 EOS C80）

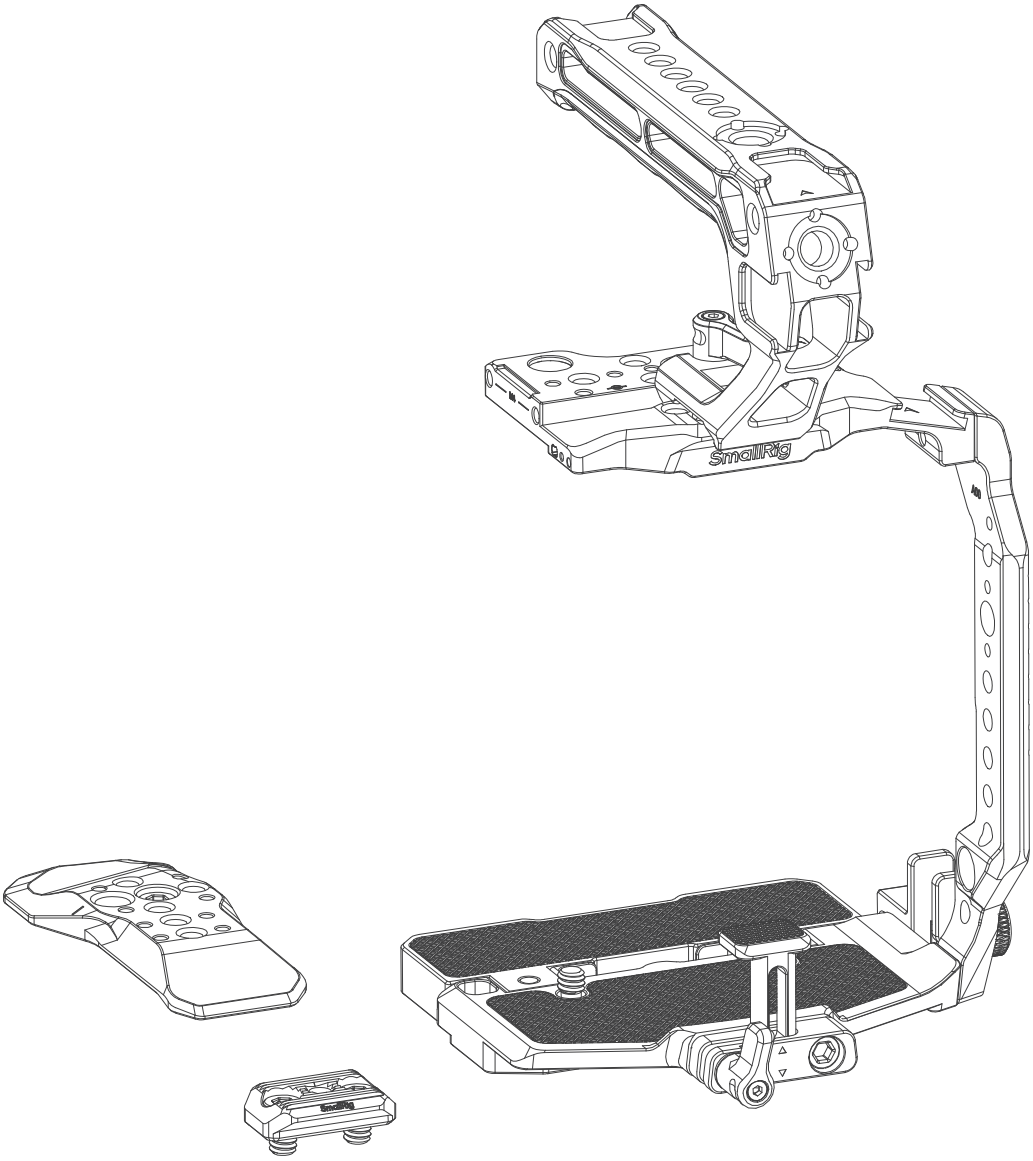

Operating Instruction / 操作指引

· Thank you for purchasing SmallRig's product.
感谢您购买 SmallRig 产品。

Product Details / 产品介绍

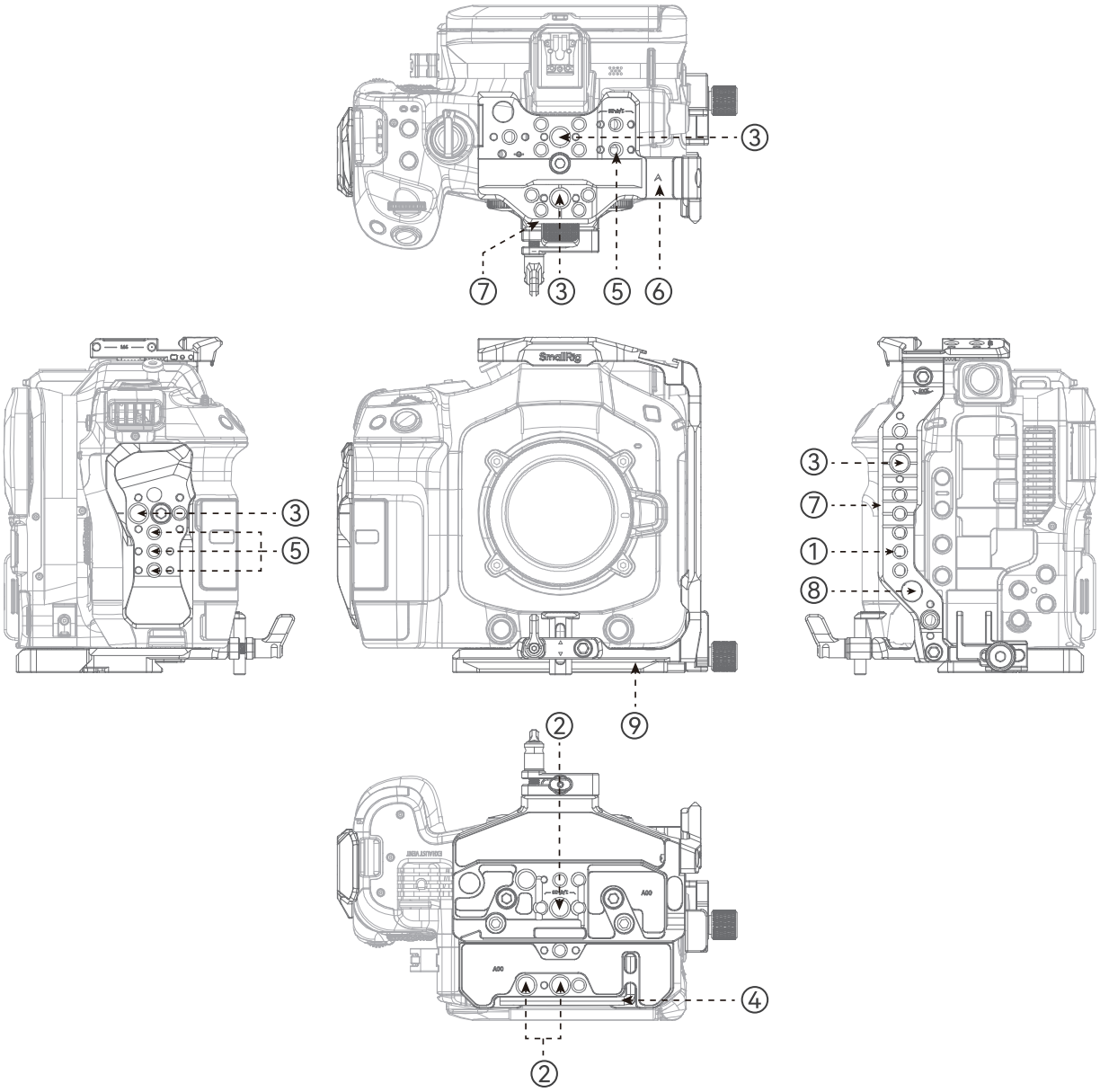

① 1/4"-20 Threaded Hole
1/4"-20 螺纹孔

② 3/8"-16 Threaded Hole
3/8"-16 螺纹孔

③ ARRI 3/8"-16 Locating Hole
阿莱(ARRI) 定位孔

④ Allen Wrench
六角扳手

⑤ 1/4"-20 Locating Hole
1/4"-20 定位孔

⑥ Cold Shoe Mount
冷靴

⑦ H21 NATO Rail
H21 快拆滑条

⑧ QD Socket
QD 接口

⑨ H38 Arca-Swiss Quick Release Plate
H38 快拆阿卡规格快装板

In the Box / 包装清单

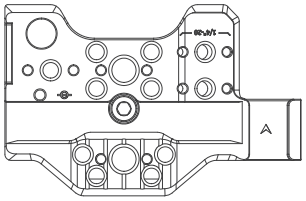

Top Plate × 1
顶板

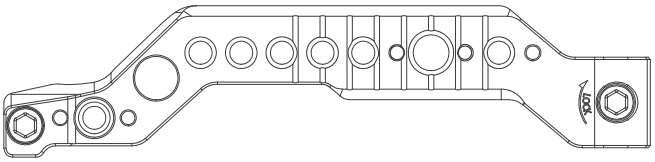

Left Plate × 1
左侧板

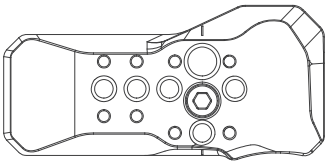

Right Plate × 1
右侧板

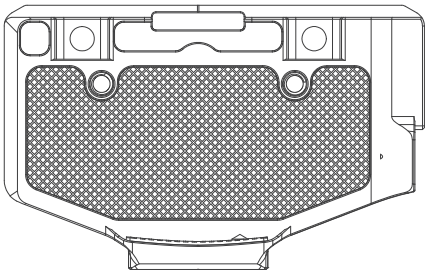

Bottom Plate × 1
底板

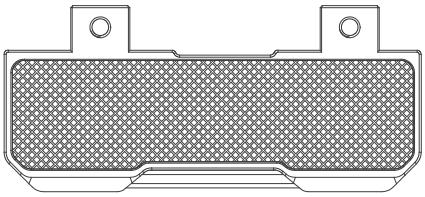

Mount Plate × 1
拓展底板

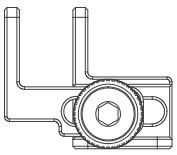

Cable Clamp × 1
线夹

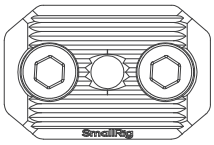

NATO Rail × 1
带齿滑条

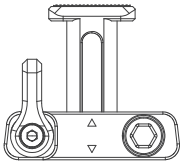

Lens Adapter Support × 1
镜头转接环支撑

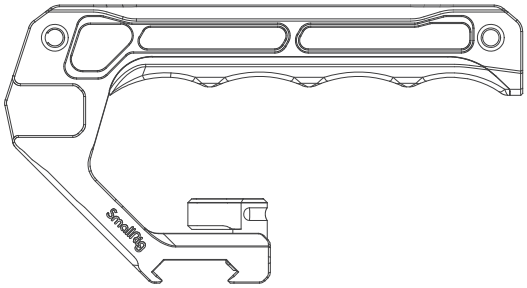

Top Handle with NATO Clamp × 1
滑槽上手提

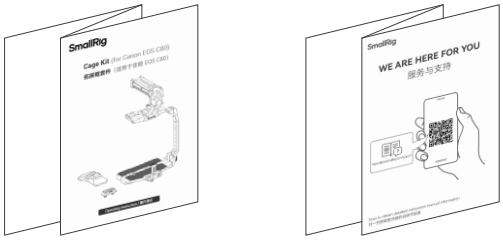

Operating Instruction, Guarantee Card × 1
操作指引 + 保修卡

Installation Instructions / 安装步骤

1

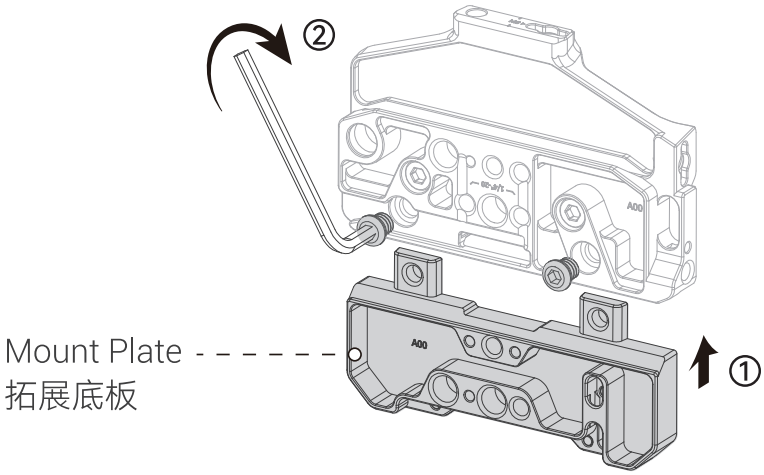

2

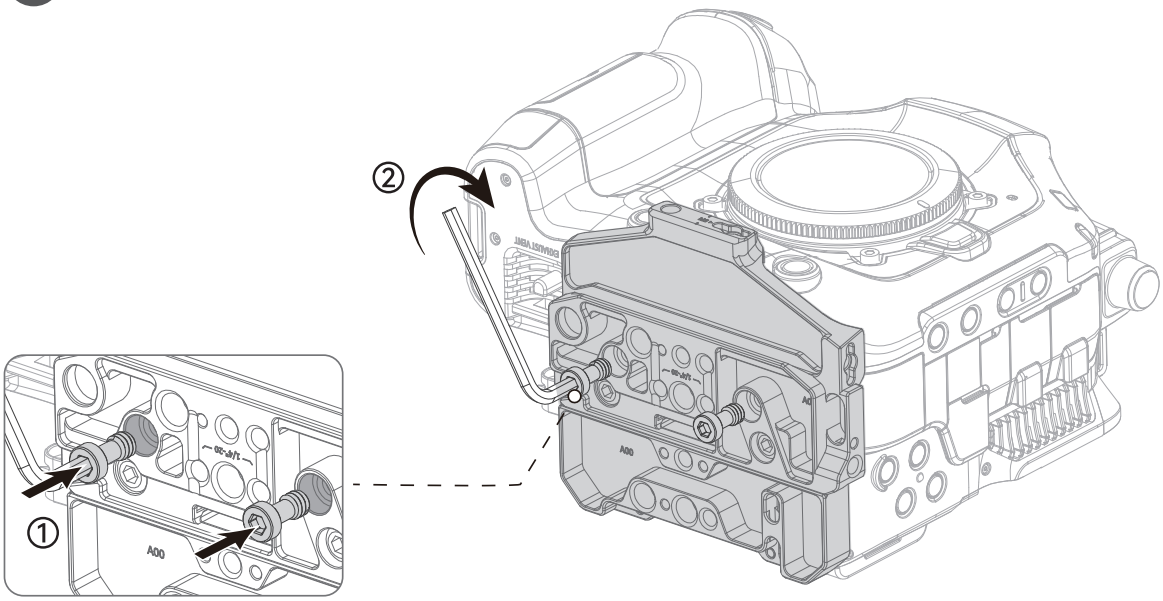

3

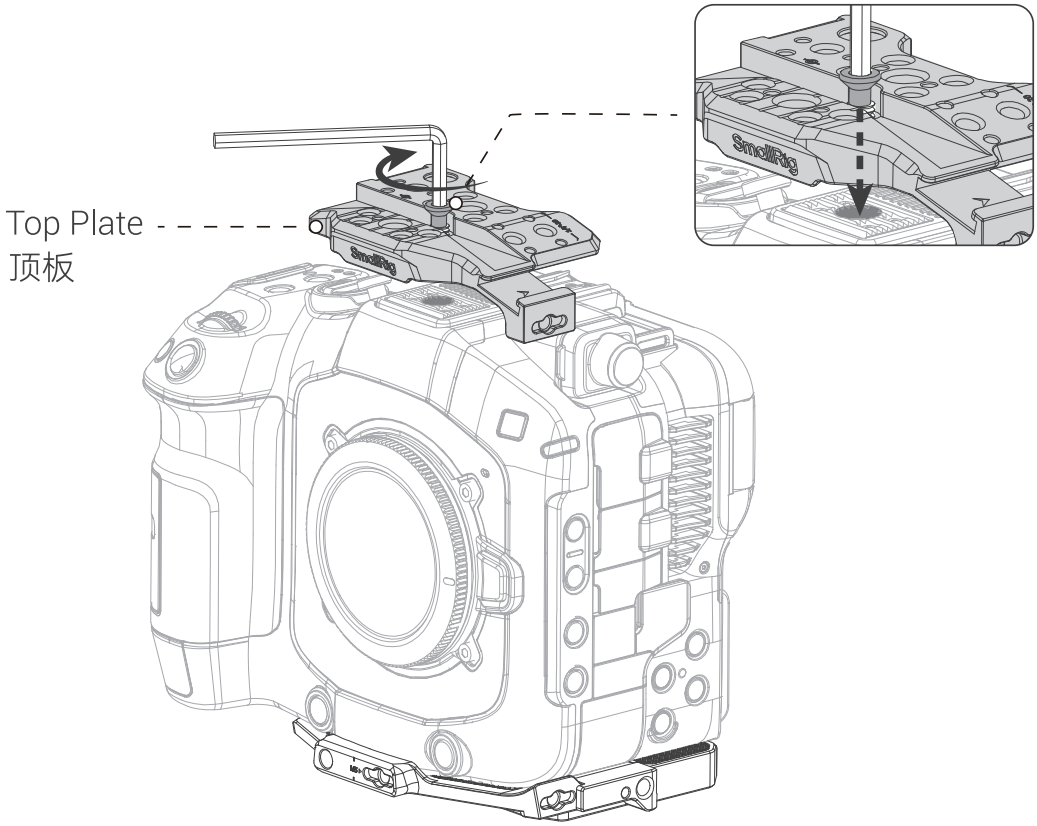

4

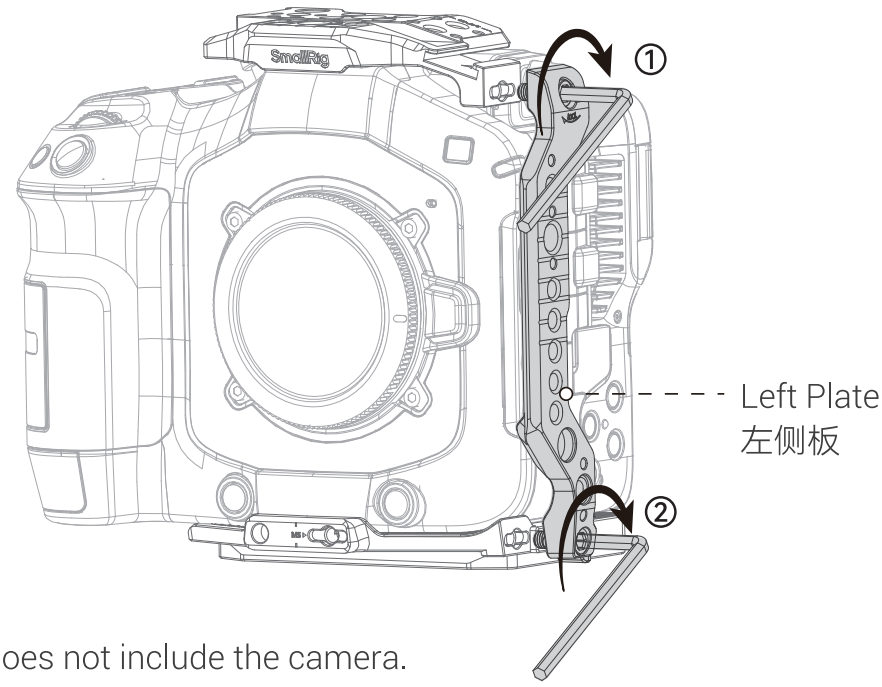

* The package does not include the camera.
* 相机机身需另购

5

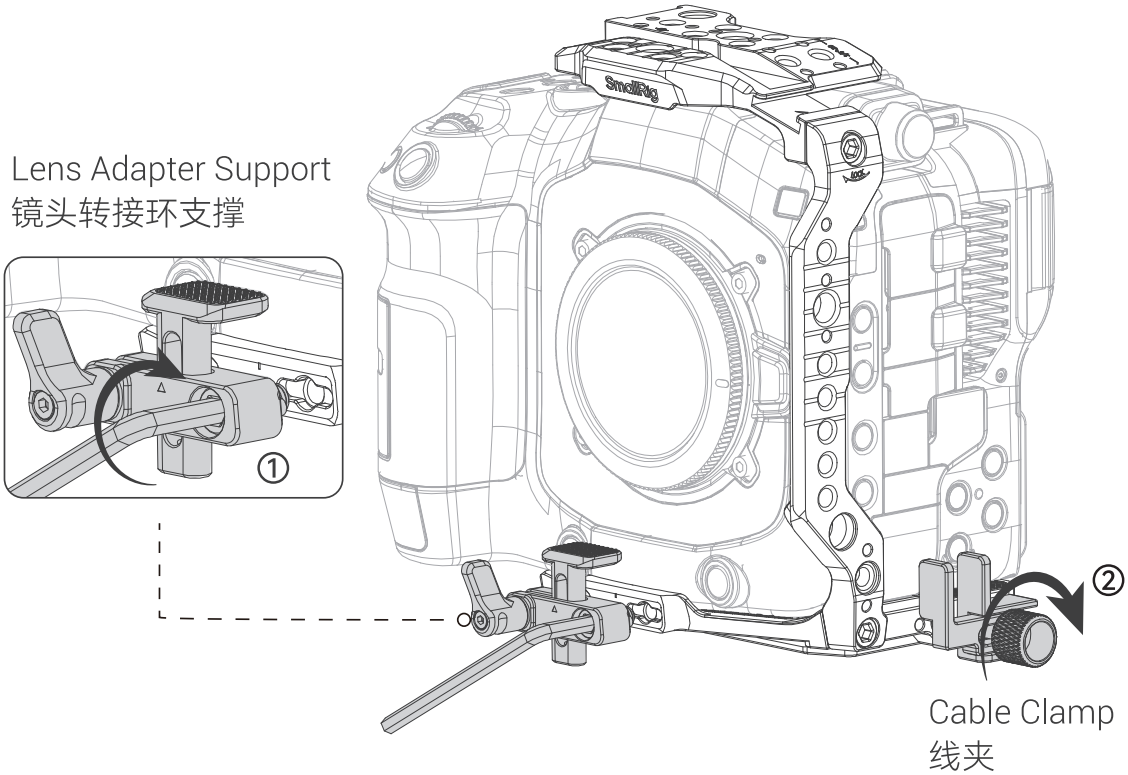
Lens Adapter Support
镜头转接环支撑
①
②
Cable Clamp
线夹

6

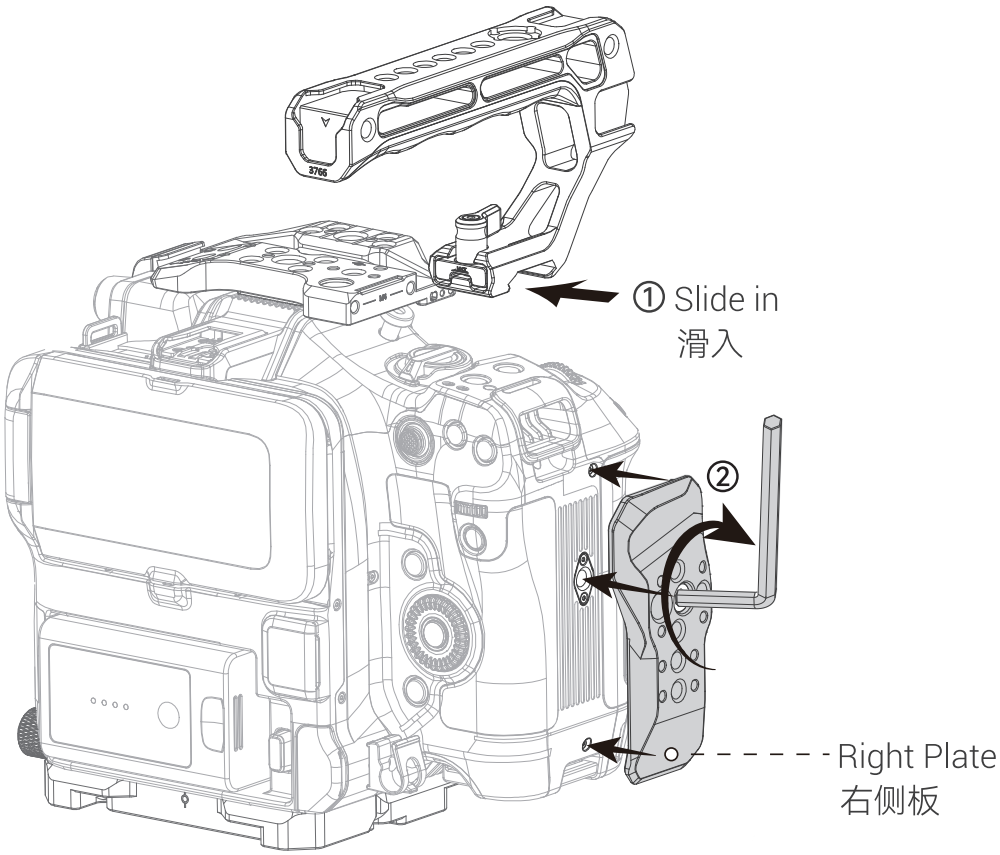
① Slide in
滑入
②
Right Plate
右侧板

7

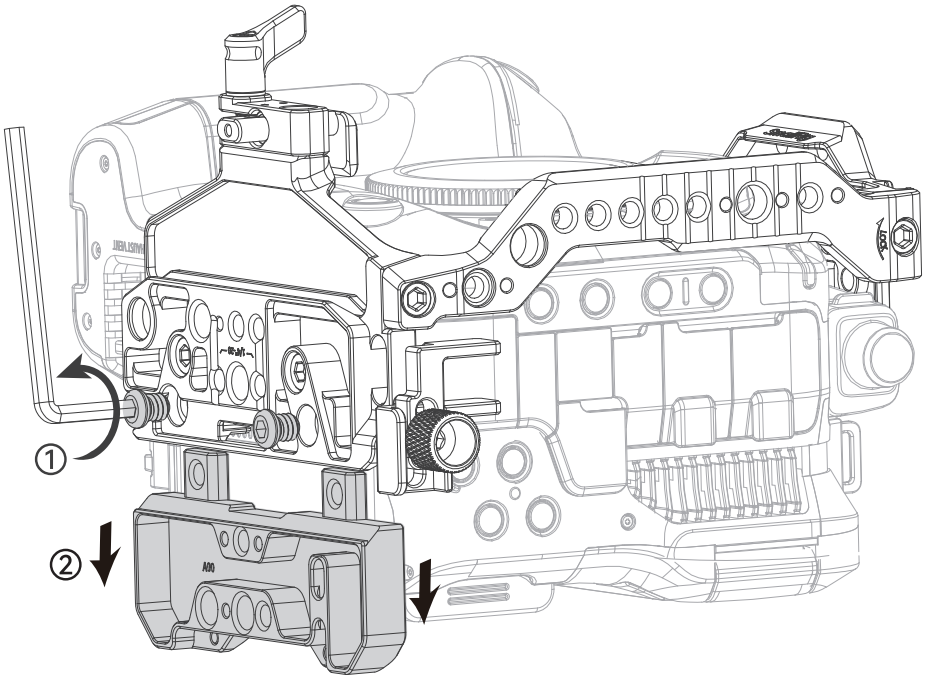

* To install on DJI RS 2 / DJI RS 3 Pro / DJI RS 4 Pro, the mount plate must be removed first.

安装至DJI RS 2 / DJI RS 3 Pro / DJI RS 4 Pro之前，需拆除拓展底板。

8 To use the original top handle, please install NATO Rail.
如需使用原厂上手提，请安装滑条。

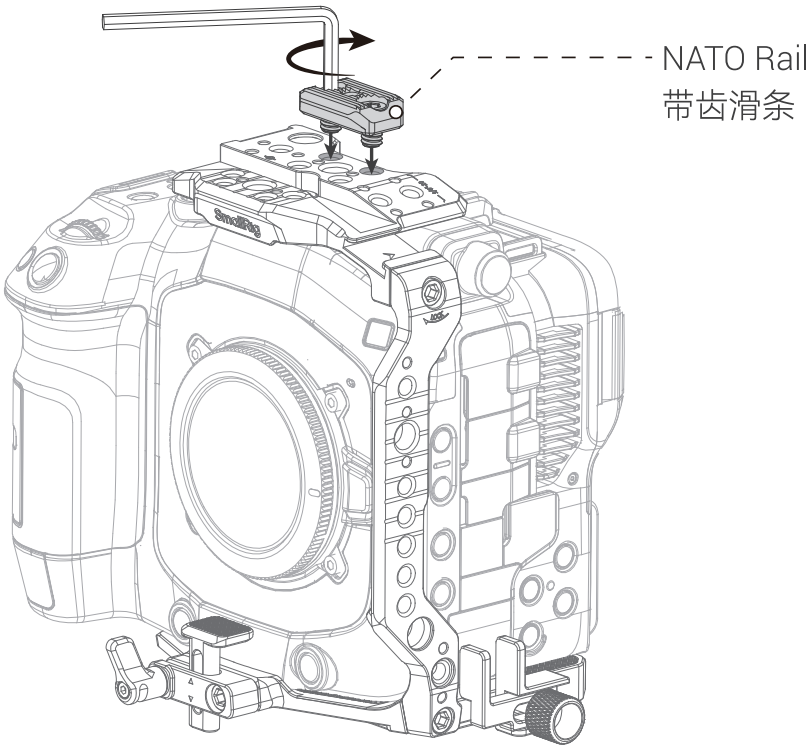

Specifications / 产品参数

Product Dimensions 产品尺寸	7.5 × 5.2 × 6.6in 189.9 × 132.0 × 167.7mm
Product Weight 产品重量	16.1 ± 0.2oz 457.0 ± 5.0g
Material(s) 主要材质	Aluminum Alloy, Stainless Steel 铝合金、不锈钢

Specifications subject to change without prior notice. Please refer to the physical product for the most up-to-date information.

技术参数如有改动，以实物为准，恕不另行通知。

LQ-P1471-18

Manufacturer Email: support@smallrig.com
Manufacturer: Shenzhen Leqi Innovation Co., Ltd.
Add: Rooms 101, 701, 901, Building 4, Gonglianfuji Innovation Park, No. 58, Ping'an Road, Dafu Community, Guanlan Street, Longhua District, Shenzhen, Guangdong, China.

制造商：深圳市乐其创新股份有限公司
地址: 中国广东省深圳市龙华区观澜街道大富社区平安路58号共联富基创新园4栋101、701、901

Consignor: Shenzhen LC Co., Ltd.
Add: Room 201, Building 4, Gonglianfuji Innovation Park, No. 58, Ping'an Road, Dafu Community, Guanlan Street, Longhua District, Shenzhen, Guangdong, China.

委托商: 深圳市乐长科技有限公司
地址: 中国广东省深圳市龙华区观澜街道大富社区平安路58号共联富基创新园4栋201

执行标准：GB/T 26572-2011

RoHS CE 22 PAP 合格证 已检验

FR LE TRI FACILE Boîte 1 + Papier 5 BAC DE TRI

Séparez les éléments avant de trier

RECICLA Al Azul

中国制造
Made in China