SmallRig

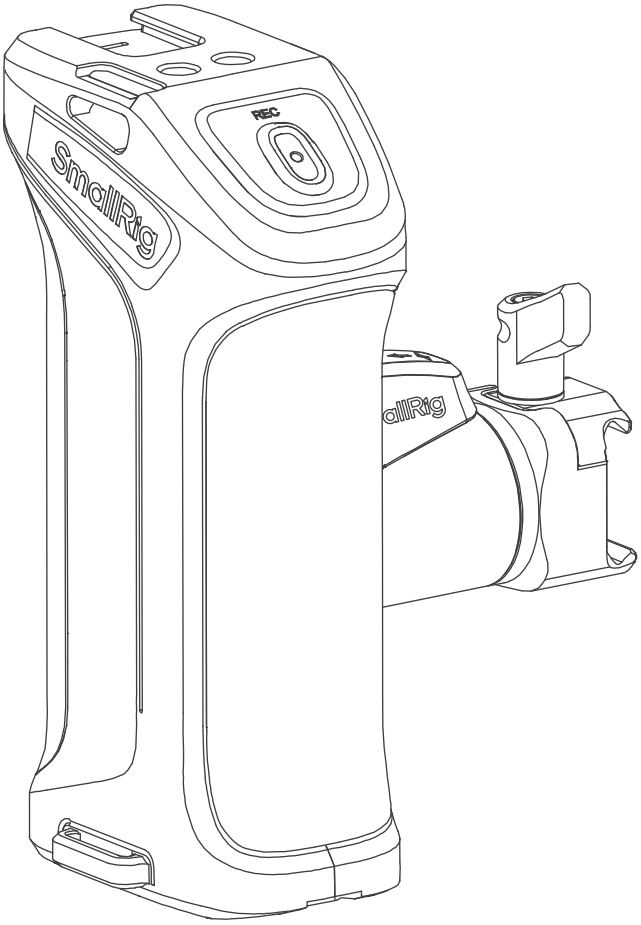

Rotating Side Handle with Trigger REC

旋 转 录 制 侧 手 柄

Operating Instruction / 操作指引

· Thank you for purchasing SmallRig's product.
感谢您购买 SmallRig 产品。

· Please read this Operating Instruction carefully.
使用本产品之前，请仔细阅读操作指引。

· Please follow the safety warnings.
请注意所有警告提示并遵循使用操作指引的所有指令。

In the Box / 包装清单

3893: for Selected Sony Mirrorless Cameras
(适用于索尼微单相机)

Side Handle 手柄	× 1	Operating Instruction 操作指引	× 1
Control Cable for Sony 索尼控制线	× 1	Guarantee Card 保修卡	× 1
NATO Rail 滑条	× 1	User Manual 用户手册	× 1
Allen Wrench 六角扳手	× 1		

5235: for Selected Canon / Blackmagic Design Cameras
(适用于佳能 / Blackmagic Design相机)

Side Handle 手柄	× 1	Operating Instruction 操作指引	× 1
NATO Rail 滑条	× 1	Guarantee Card 保修卡	× 1
Allen Wrench 六角扳手	× 1	User Manual 用户手册	× 1
Control Cable for Canon / Blackmagic Design 佳能 / Blackmagic Design 控制线			× 1

* Please refer to the product sales page information for product compatibility.
* 产品兼容性请参考产品售卖页面信息。

Product Details / 产品介绍

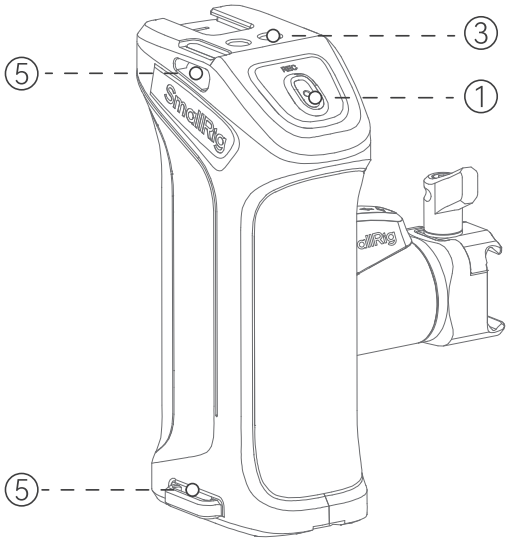

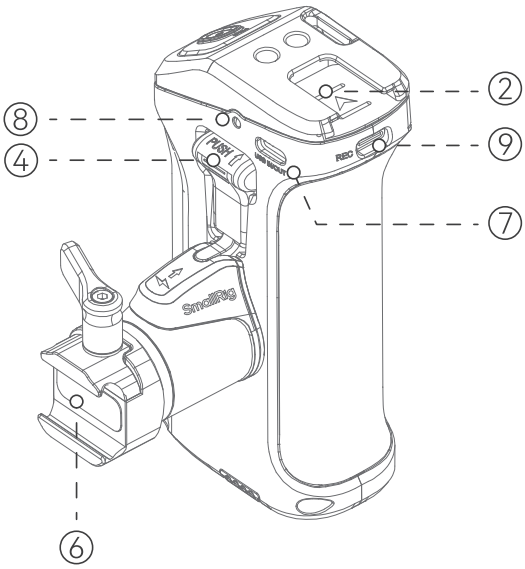

① Record & Power On/Off Button
录制 & 电源开关机按钮

② H18 Cold Shoe
冷靴

③ 1/4"-20 Threaded Hole
1/4"-20 螺纹孔

④ Rotating Unlock Button
旋转解锁按钮

⑤ Strap Slot
腕带孔

⑥ NATO Clamp
滑槽接口

⑦ USB-C Power & Charging Port
C口供电 & 充电接口

⑧ Indicator Light
指示灯

⑨ Control Connection Port
控制接口

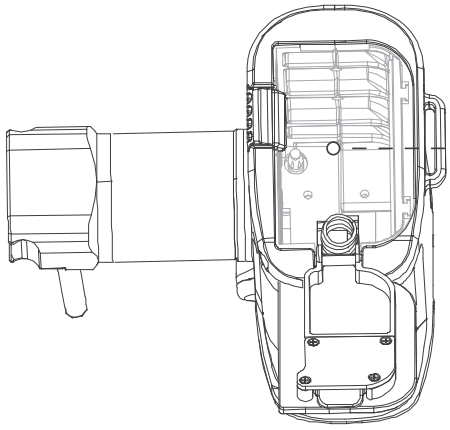

⑩ NP-F550 / 570 Battery Compartment
NP-F550 / 570 电池仓

Installation Instruction / 安装步骤

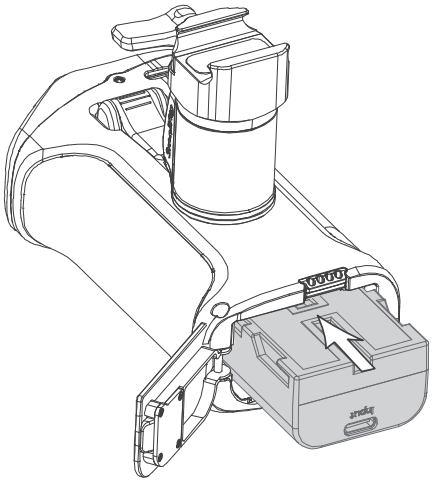

Note / 注意事项

1. When using Sony cameras, the handle can realize the control of the camera recording function without installing the NP-F550 / NP-F570 battery.

   使用索尼相机时，手柄不安装NP-F550 / NP-F570 电池也能实现对相机录制功能的控制。

* The package does not include the NP-F550 or NP-F570 batteries.
* NP-F550或NP-F570电池需另购。

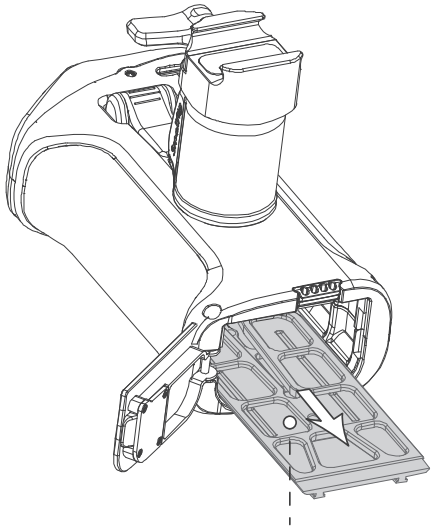

Note / 注意事项

1. When using the SmallRig NP-F550 battery (ID: 4331/4971), you need to remove the adaptor plate inside the handle.

   使用斯莫格 NP-F550 电池 (ID: 4331/ 4971) 时，需要将手柄内部的适配板取出。

Sony Mirrorless Cameras Installation Steps

索尼微单相机安装步骤

❶

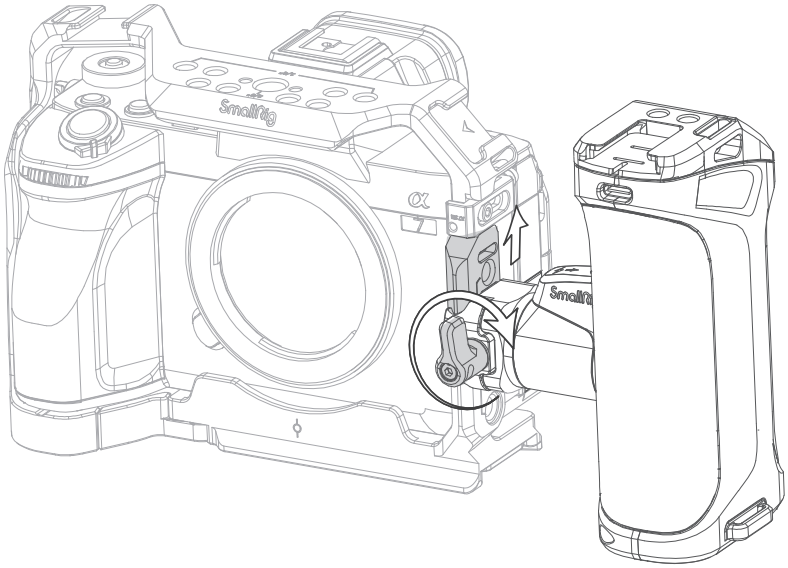

* The package does not include the camera and cage.

* 相机机身、拓展框需另购

---

❷

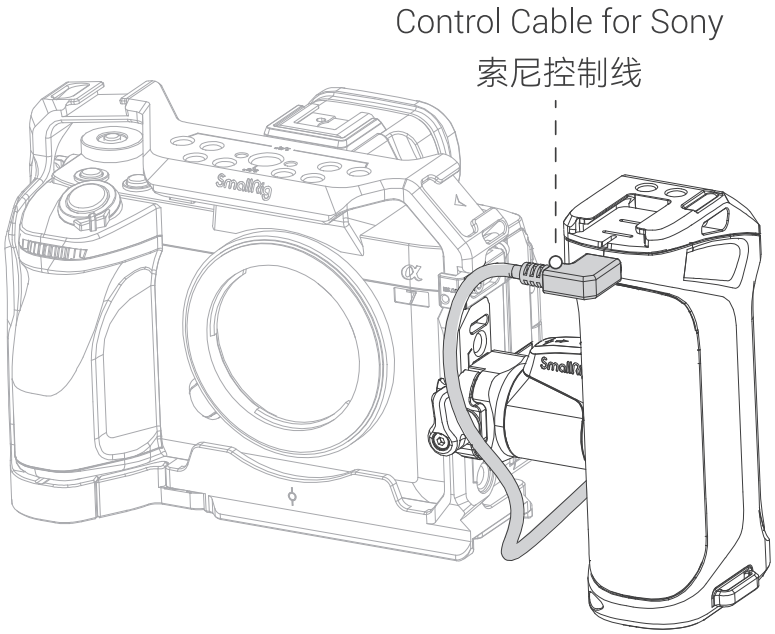

* The package does not include the camera and cage.

* 相机机身、拓展框需另购

❸

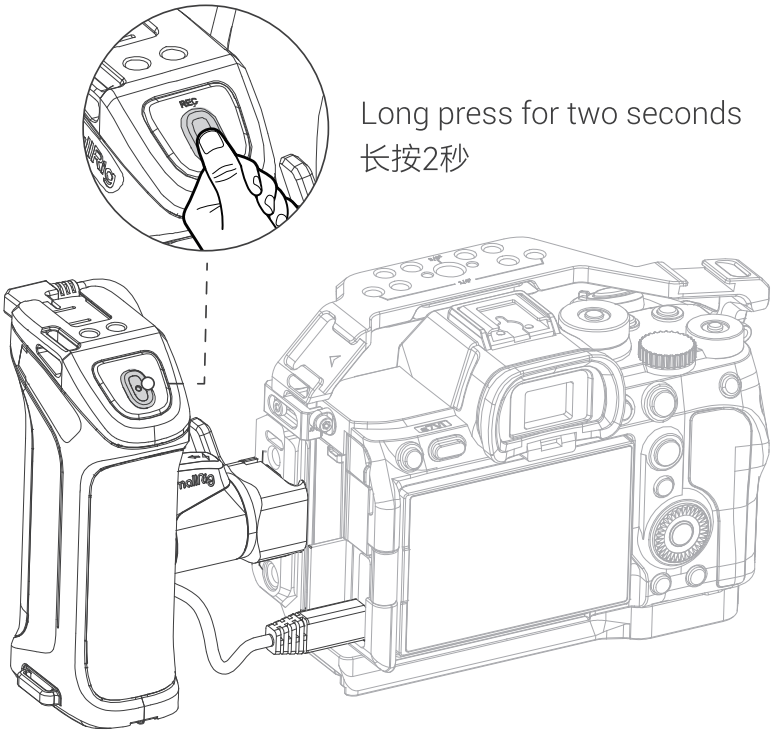

Long press for two seconds
长按2秒

* The package does not include the camera and cage.
* 相机机身、拓展框需另购

Canon / Blackmagic Design Cameras Installation steps

佳能 / Blackmagic Design 相机安装步骤

❶

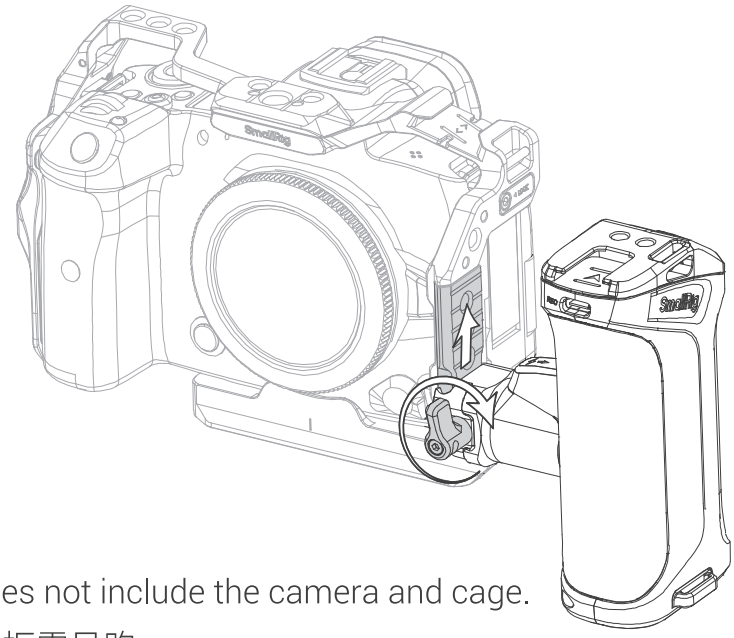

* The package does not include the camera and cage.
* 相机机身、拓展框需另购

❷

Control Cable for Canon / Blackmagic Design
佳能 / Blackmagic Design 控制线

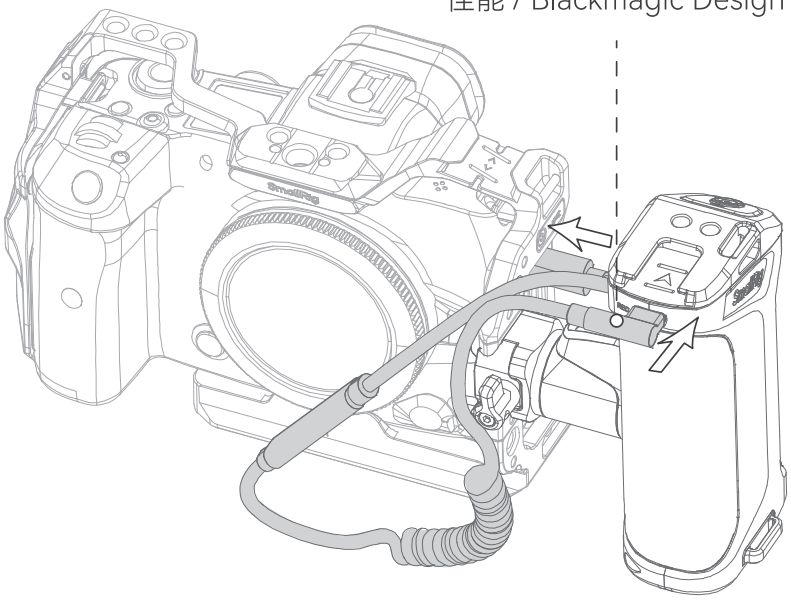

* The package does not include the camera and cage.
* 相机机身、拓展框需另购

❸

Long press for two seconds
长按2秒

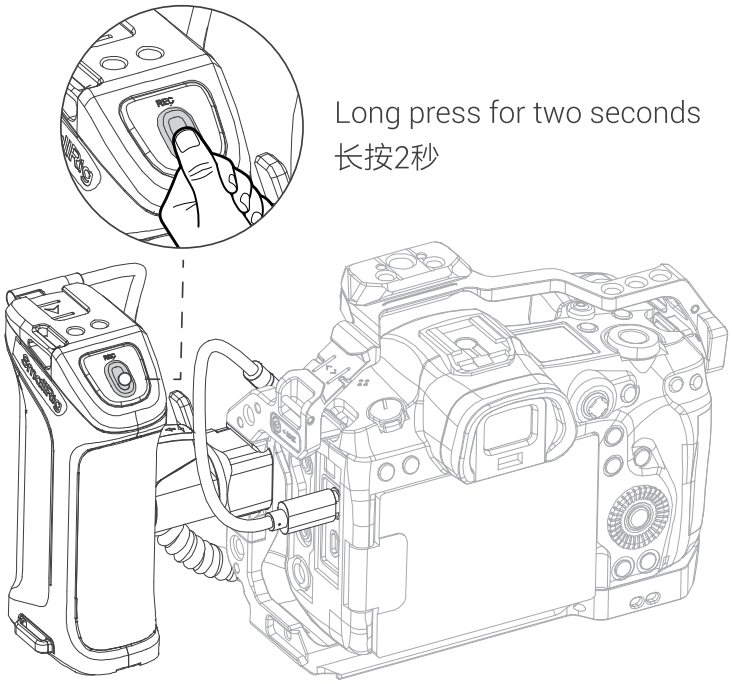

When not using this product for a long time, please long press the power button to turn off or remove the battery.
长时间不使用此产品时，请长按电源按键关机或取出电池。

Indicator Light Instuctions / 指示灯说明

Indicator Light Status	Instructions
Green light always on	Battery level ≥ 20% or fully charged
Red light always on	Battery level < 20% or charging
Red light flashes slowly (1 time/1S)	Battery level <10%
Red light flashes fast (1 time/0.1S)	Overcurrent reminder (abnormality), automatically enter the protection state until the abnormality is lifted. ★ Check whether the operating power of the device connected to the USB-C Power & Charging Port exceeds the maximum output power of the Handle, if it does, stop using the Handle to power the device. If not exceeded, try reconnecting the device.
Indicator light off	Battery level at 0% or not connected to a power source.

指示灯状态	说明
绿灯常亮	电池电量 ≥ 20%或已经充满电
红灯常亮	电池电量 < 20% 或充电
红灯缓慢闪烁（1次/1S）	电池电量 < 10%
红灯快速闪烁（1次/0.1S）	过流提醒（异常），自动进入保护状态直到异常解除。 ★ 检查C口供电 & 充电接口连接设备的工作功率是否超出手柄的最大输出功率。如果超出，请停止使用手柄给该设备供电；如果未超出，请尝试重新连接设备。
熄灭	电池电量为0% 或未接通电源

Specifications / 产品参数

SKU: 3893	
Input 输入	5V⎓3A, 9V⎓2.22A, 12V⎓1.67A, 20V⎓1A
Output 输出	5V⎓3A, 9V⎓2.22A, 12V⎓1.67A, 15V⎓1.33A, 20V⎓1A
Operating Temperature 工作温度	0℃ – 40℃ / 32℉ – 104℉
Operating Humidity 工作湿度	10% – 90% RH (no condensing)
Product Dimensions 产品尺寸	4.5 × 2.2 × 3.3in 115.3 × 56.7 × 85.0mm
Product Weight 产品重量	11.0 ± 0.2oz 312.0 ± 5.0g

SKU: 5235	
Input 输入	5V⎓3A, 9V⎓2.22A, 12V⎓1.67A, 20V⎓1A
Output 输出	5V⎓3A, 9V⎓2.22A, 12V⎓1.67A, 15V⎓1.33A, 20V⎓1A
Operating Temperature 工作温度	0℃ – 40℃ / 32℉ – 104℉
Operating Humidity 工作湿度	10% – 90% RH (no condensing)
Product Dimensions 产品尺寸	4.5 × 2.2 × 3.3in 115.3 × 56.7 × 85.0mm
Product Weight 产品重量	11.8 ± 0.2oz 336.0 ± 5.0g

执行标准：GB 4943.1-2022 LQ-P1402-18

Manufacturer Email: support@smallrig.com
Manufacturer: Shenzhen Leqi Innovation Co., Ltd.
制造商: 深圳市乐其创新股份有限公司
Add: Rooms 101, 701, 901, Building 4, Gonglianfuji Innovation Park, No. 58, Ping'an Road, Dafu Community, Guanlan Street, Longhua District, Shenzhen, Guangdong, China.
地址: 中国广东省深圳市龙华区观澜街道大富社区平安路58号共联富基创新园4栋101、701、901

Consignor: Shenzhen LC Co., Ltd.
委托商：深圳市乐长科技有限公司
Add: Room 201, Building 4, Gonglianfuji Innovation Park, No. 58, Ping'an Road, Dafu Community, Guanlan Street, Longhua District, Shenzhen, Guangdong, China.
地址: 中国广东省深圳市龙华区观澜街道大富社区平安路58号共联富基创新园4栋201

Made in China 中国制造

Séparez les éléments avant de trier

Points de collecte sur www.quefairedemesdechets.fr
Privilégiez la réparation ou le don de votre appareil !