SmallRig

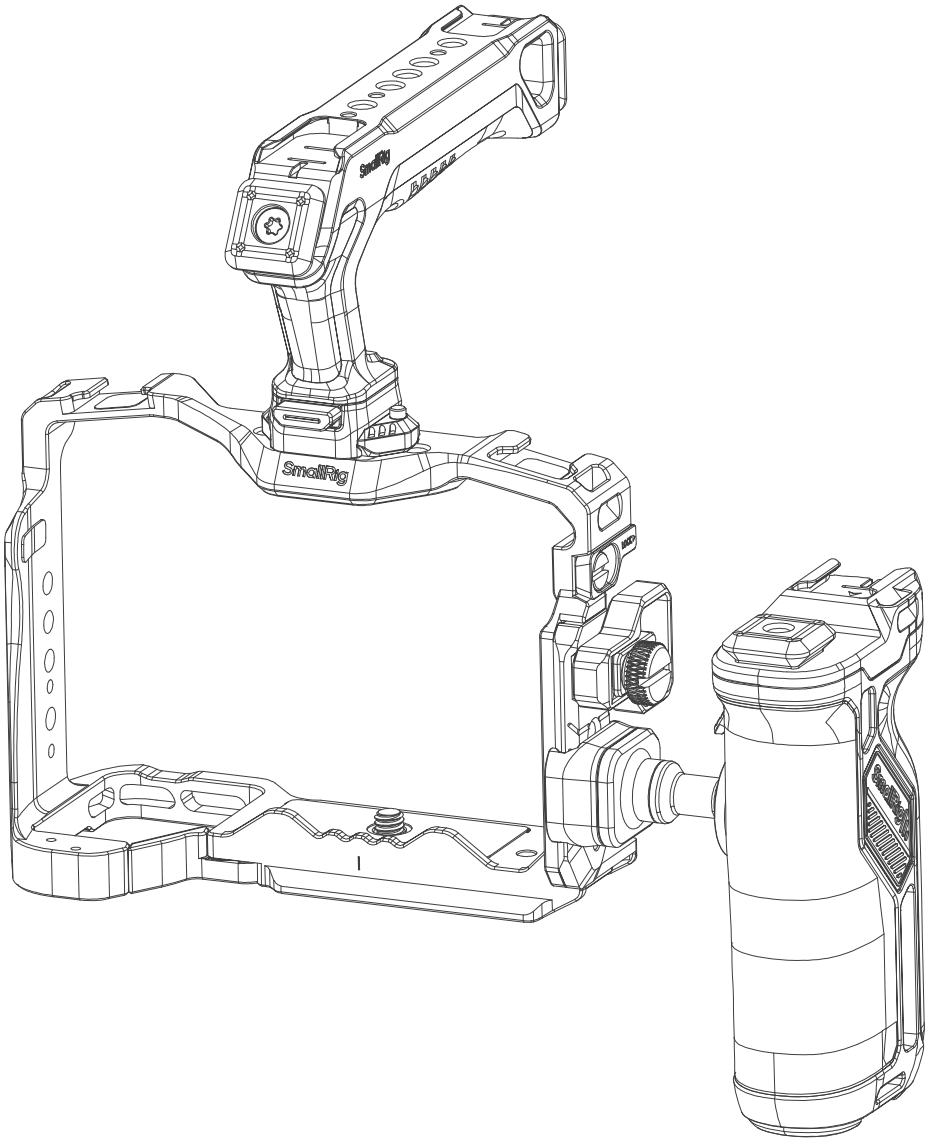

"HawkLock" Cage Kit

for Sony Alpha 7R V / 7 IV / 7S III / 1 / 7R IV (Advanced Edition)

「迅鹰」进阶版拓展框套件

(适用于索尼 Alpha 7R V / 7 IV / 7S III / 1 / 7R IV)

Operating Instruction | 操作指引

· Thank you for purchasing SmallRig's product.
感谢您购买 SmallRig 产品。

· Please read this Operating Instruction carefully.
使用本产品之前，请仔细阅读操作指引。

· Please follow the safety warnings.
请注意所有警告提示并遵循使用操作指引的所有指令。

In the Box / 包装清单

Cage 拓展框	× 1	HDMI Cable Clamp HDMI线夹	× 1	"HawkLock" Top Handle 迅鹰上提手柄	× 1
"HawkLock" Side Handle 迅鹰侧手柄	× 1	H21 NATO Rail 迅鹰H21滑条	× 1	Allen Wrench 六角扳手	× 1
Operating Instruction 操作指引	× 1	Guarantee Card 保修卡	× 1		

Product Details / 产品介绍

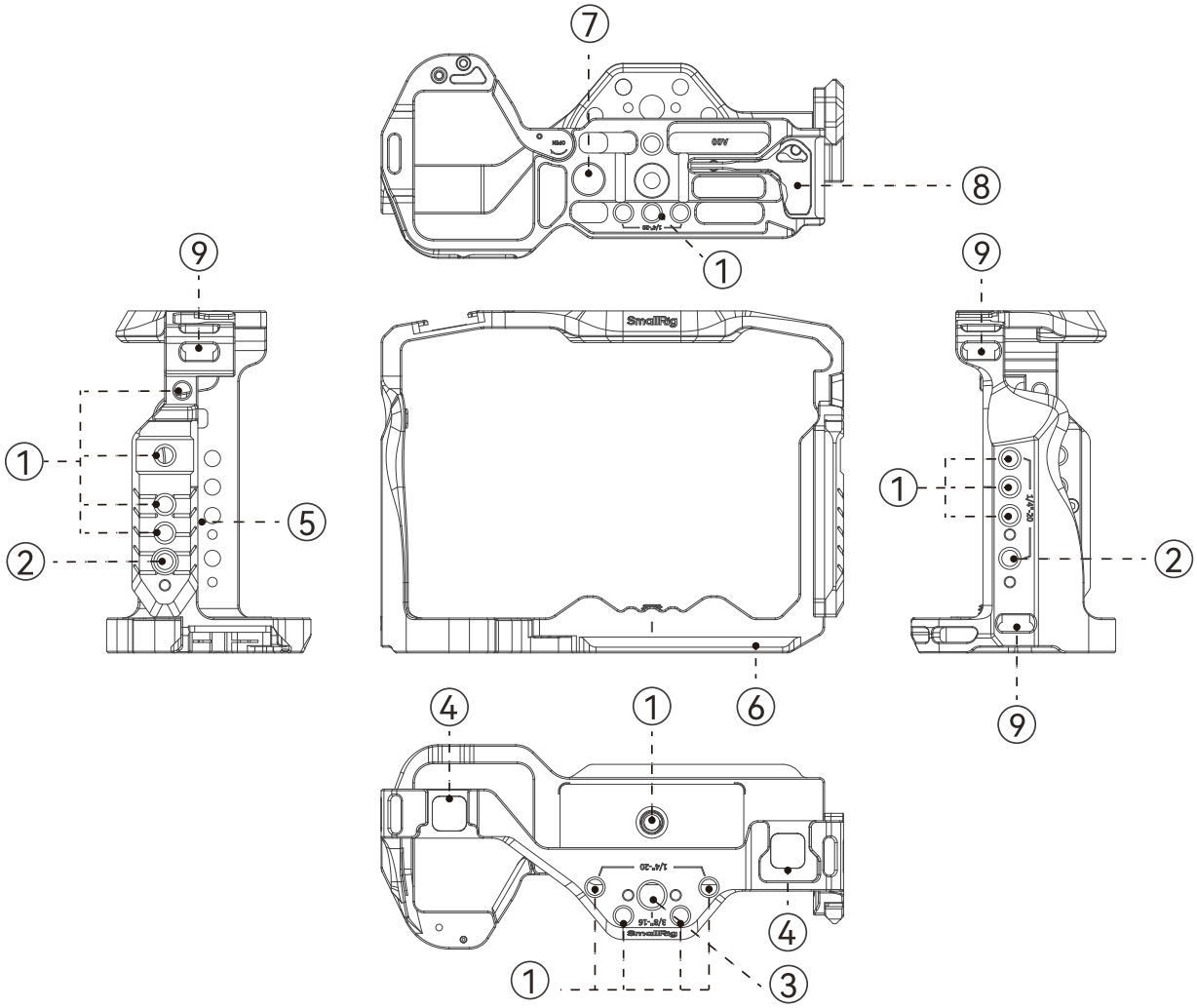

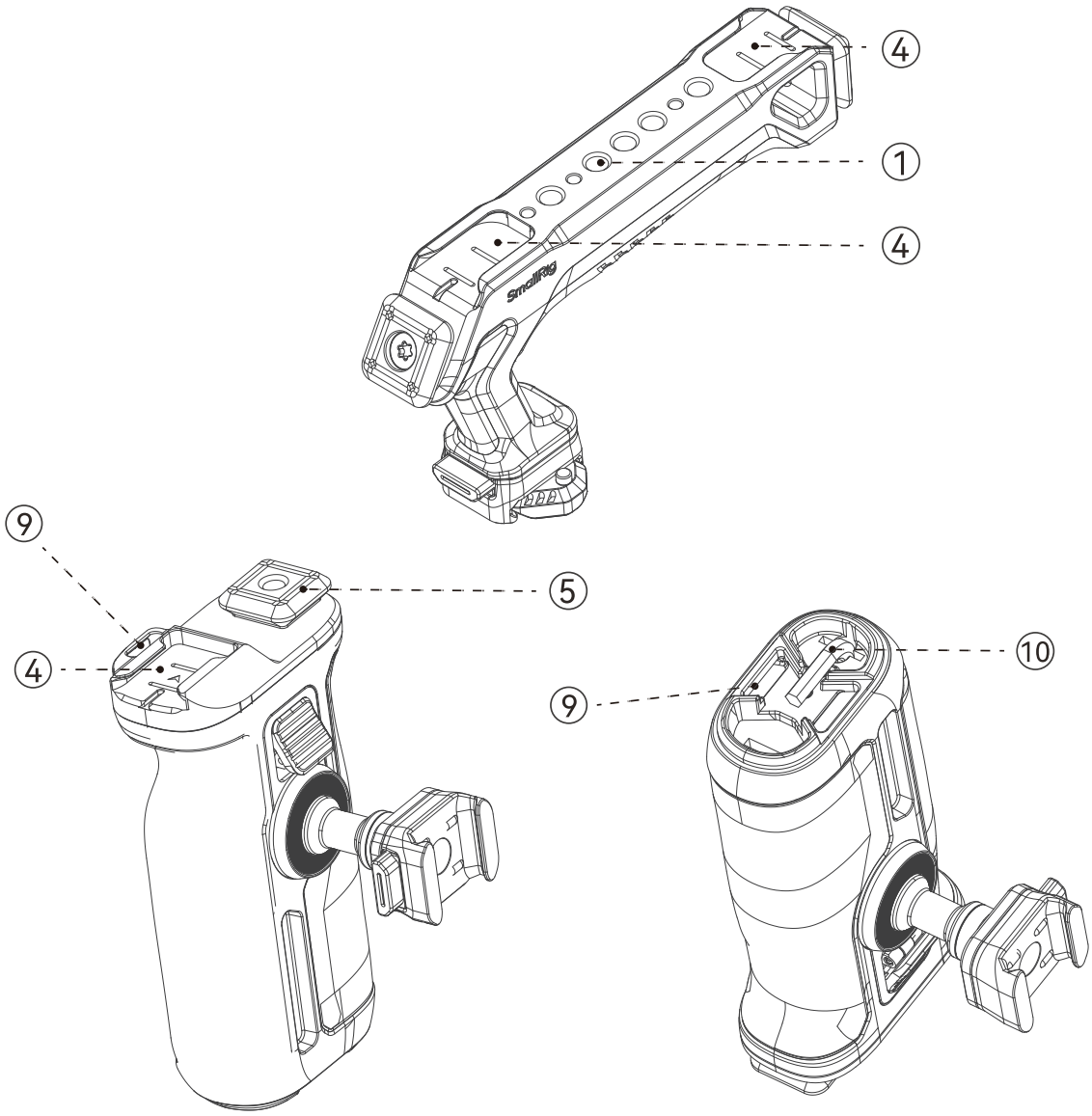

① 1/4"-20 Threaded Hole
1/4"-20 螺纹孔

② 1/4"-20 Locating Hole
1/4"-20 定位孔

③ ARRI 3/8"-16 Locating Hole
阿莱定位孔

④ Cold Shoe Mount
冷靴

⑤ H21 NATO Rail
迅鹰H21滑条

⑥ H38 Arca-Swiss Plate
迅鹰H38阿卡规格快装板

⑦ QD Socket
QD接口

⑧ Dual-Head Wrench
双头扳手

⑨ Strap Slot
腕带孔

⑩ Allen Wrench
六角扳手

Cage Installation Instruction / 拓展框安装步骤

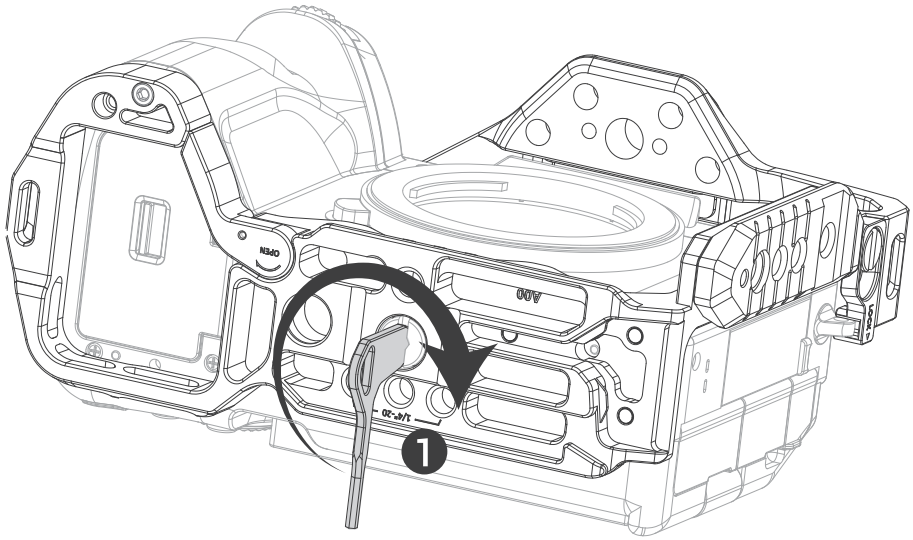

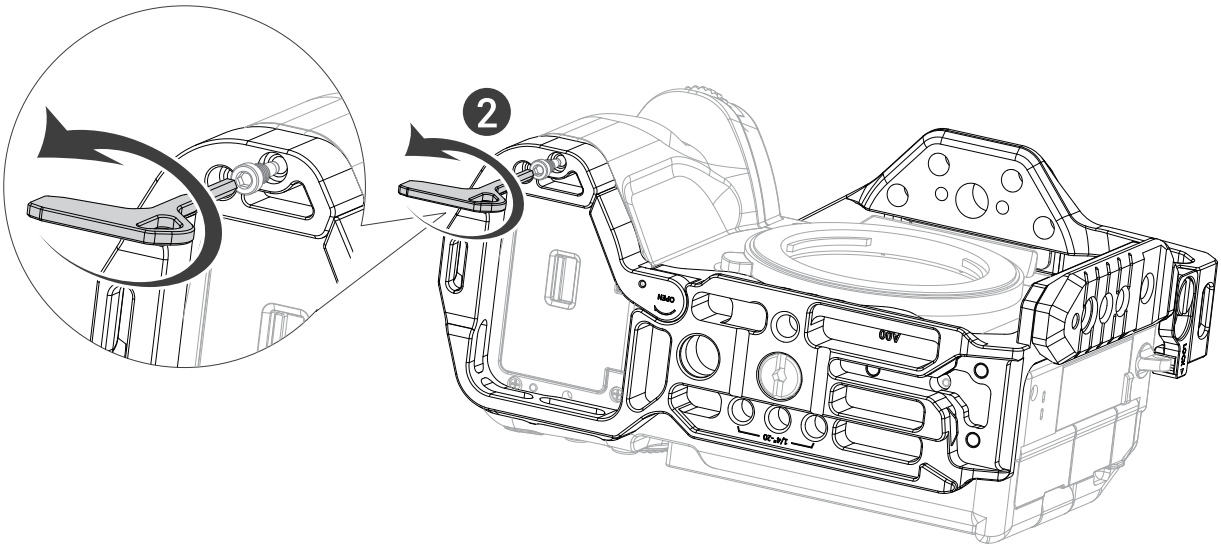

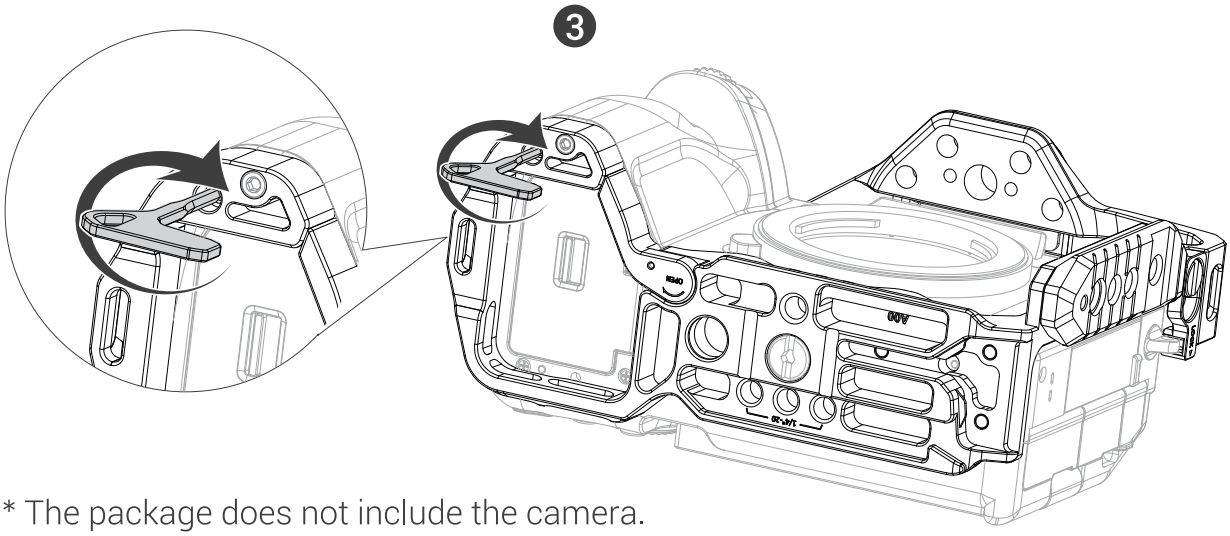

* The package does not include the camera.
* 相机机身需另购。

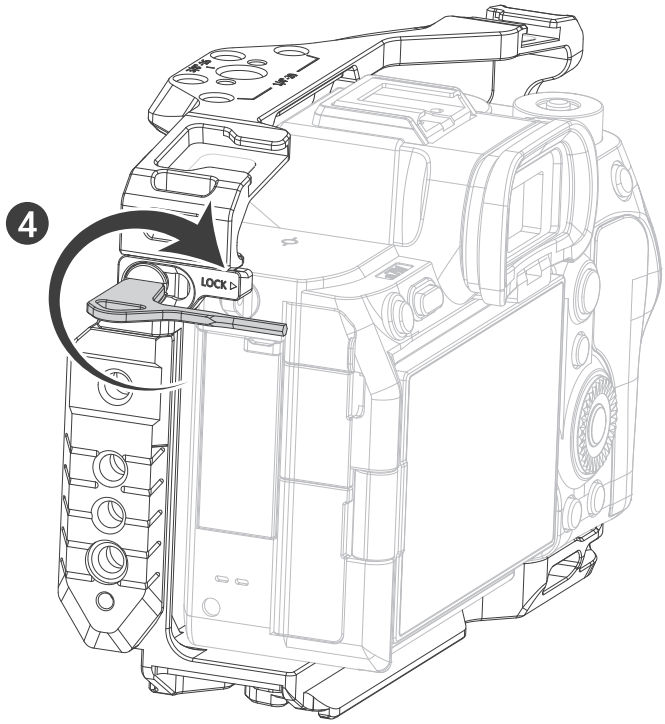

* The package does not include the camera.
* 相机机身需另购

HDMI Cable Clamp Installation Instruction /
HDMI线夹安装步骤

❶

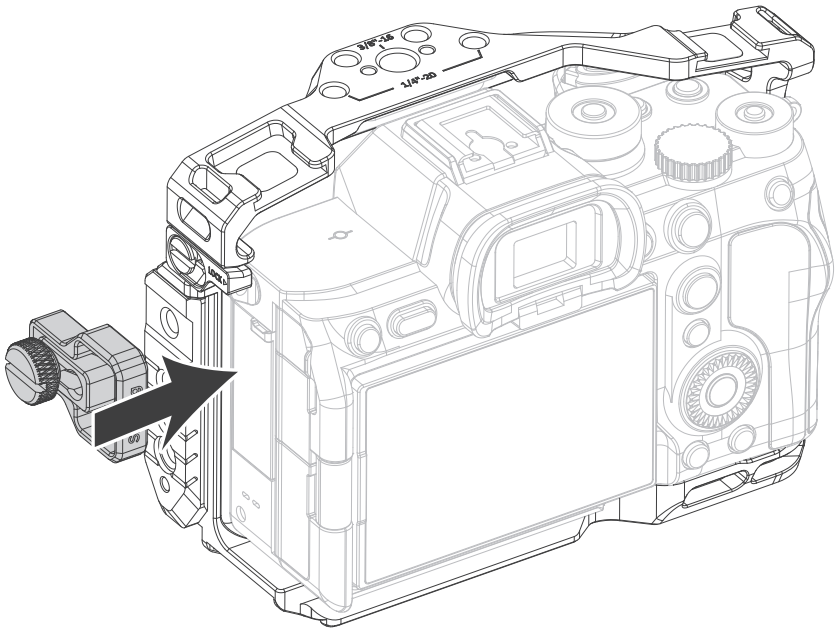

❷

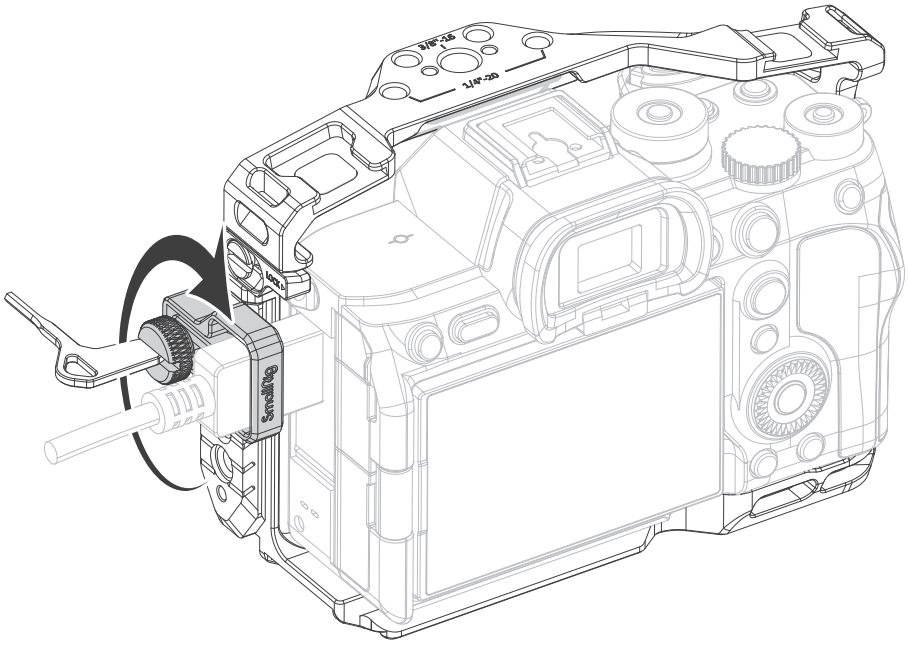

* The package does not include the camera.
* 相机机身需另购

“HawkLock” Top Handle Installation Instruction / 上提手柄安装步骤

❶

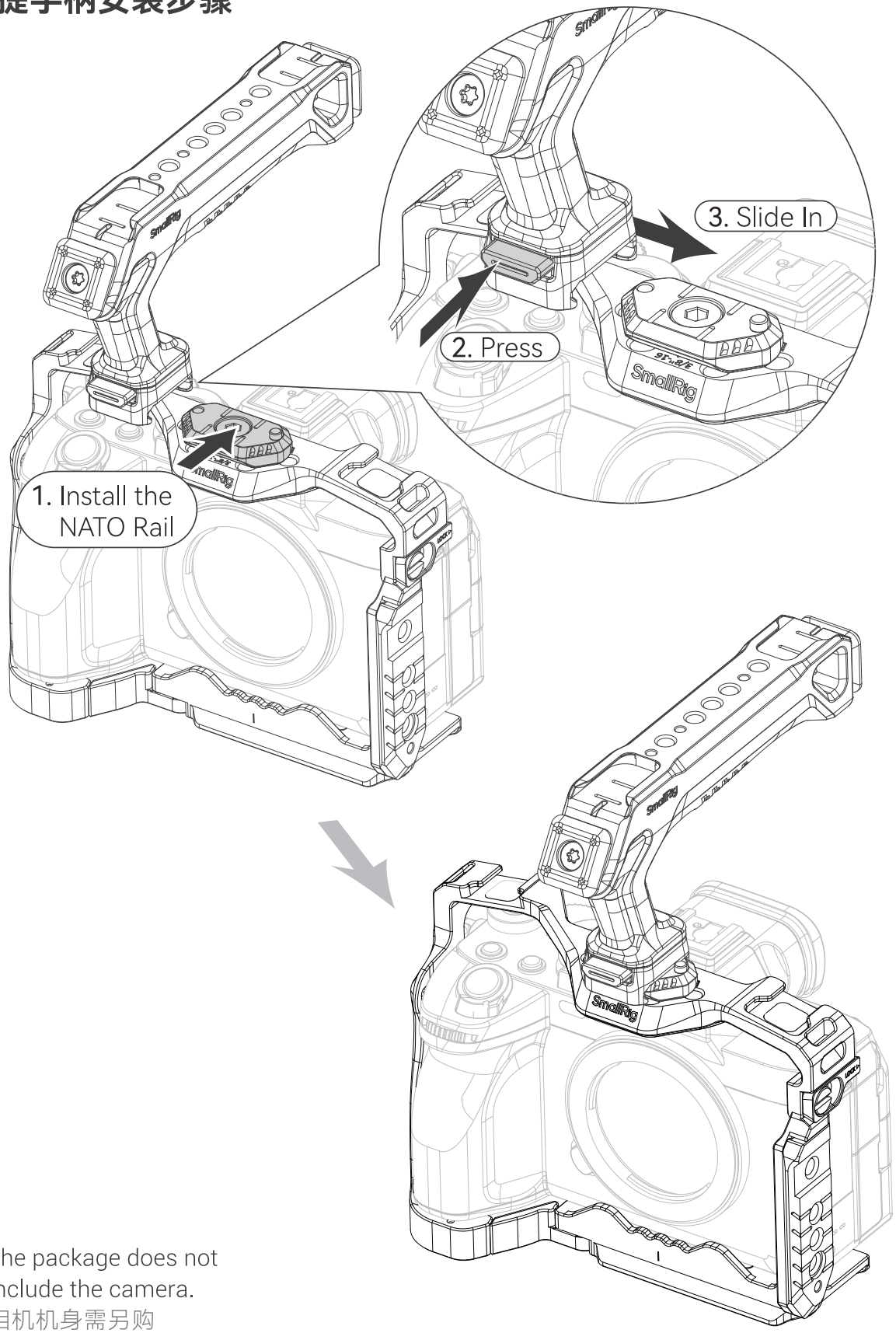

* The package does not include the camera.
* 相机机身需另购

Side Handle Installation Instruction / 侧手柄安装步骤

❶

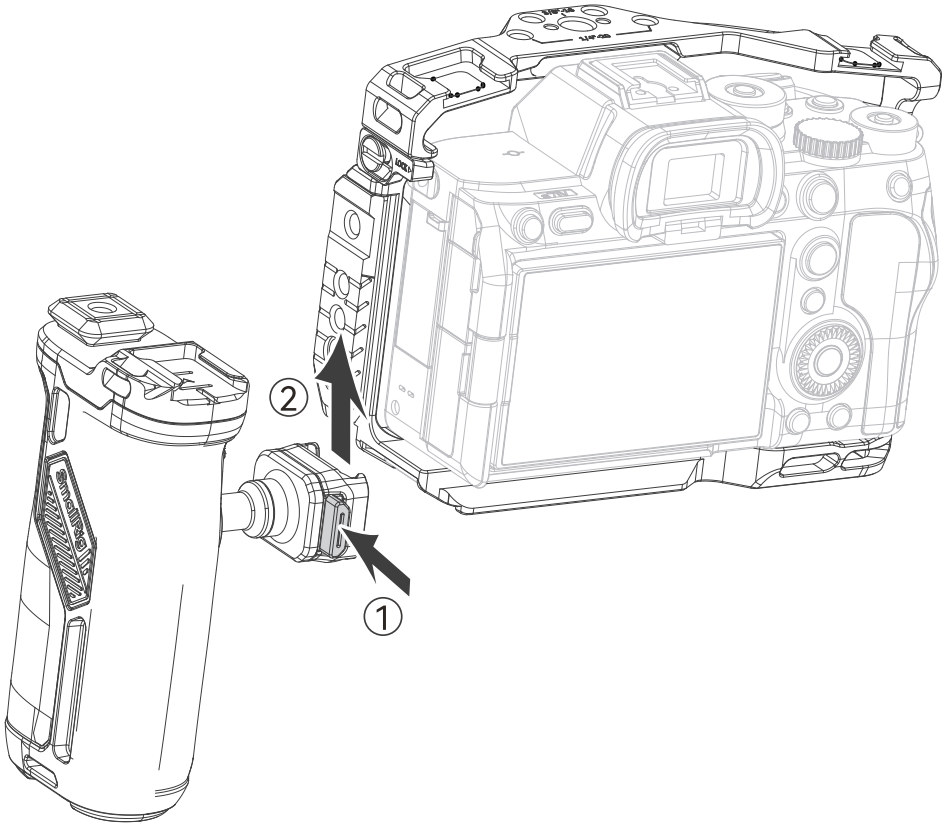

❷

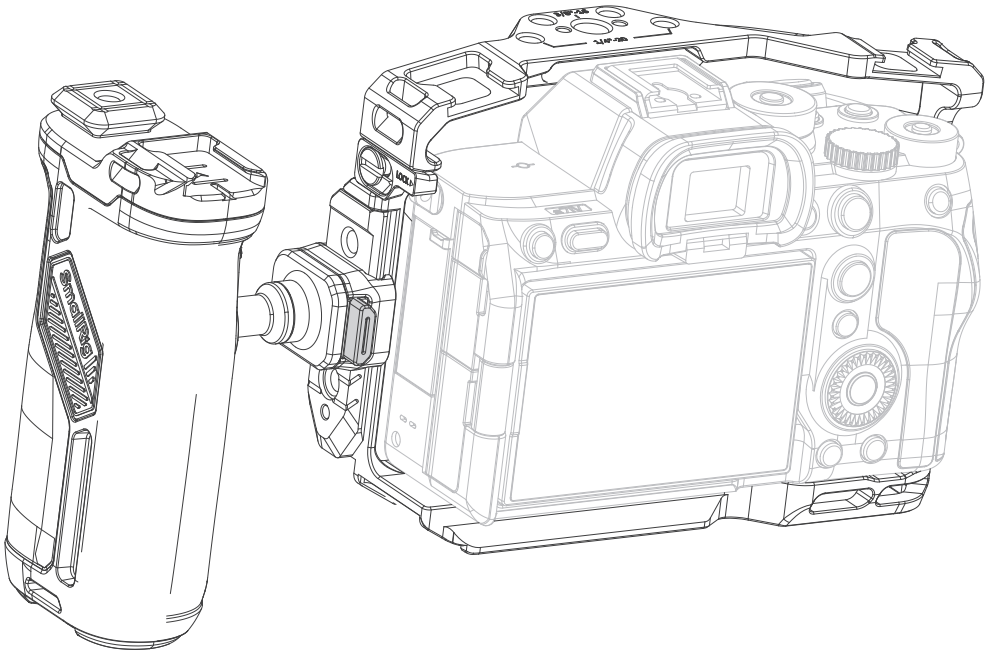

* The package does not include the camera.
* 相机机身需另购

Specifications / 产品参数

Compatibility 适配性	Sony Alpha 7R V / 7 IV / 7S III / 1 / 7R IV 索尼 Alpha 7R V / 7 IV / 7S III / 1 / 7R IV
Product Dimensions 产品尺寸	8.6 × 5.6 × 8.1in 217.5 × 141.8 × 206.6mm
Product Weight 产品重量	21.6 ± 0.2oz 611.5 ± 5.0g
Material(s) 主要材质	Aluminum Alloy 铝合金

*Specifications subject to change without prior notice. Please refer to the physical product for the most up-to-date information.

*技术参数如有改动，以实物为准，恕不另行通知。

EC REP

GAVIMOSA CONSULTORIA, SOCIEDAD LIMITADA,
CASTELLANA 9144, 28046 Madrid,
compliance.gavimosa@outlook.com

UK REP

Sea&Mew Accounting Ltd,
Electric Avenue Vision 25, London, Enfield EN3 7GD,
info@seamew.net

Manufacturer Email: support@smallrig.com

Manufacturer: Shenzhen Leqi Innovation Co., Ltd.

制造商: 深圳市乐其创新股份有限公司

Add: Rooms 101, 701, 901, Building 4, Gonglianfuji Innovation Park, No. 58, Ping'an Road, Dafu Community, Guanlan Street, Longhua District, Shenzhen, Guangdong, China.

地址: 中国广东省深圳市龙华区观澜街道大富社区平安路58号共联富基创新园4栋101、701、901

Consignor: Shenzhen LC Co., Ltd.

委托商：深圳市乐长科技有限公司

Add: Room 201, Building 4, Gonglianfuji Innovation Park, No. 58, Ping'an Road, Dafu Community, Guanlan Street, Longhua District, Shenzhen, Guangdong, China.

地址: 中国广东省深圳市龙华区观澜街道大富社区平安路58号共联富基创新园4栋201

执行标准：GB/T 26572-2011

LQ-P1555-18

RoHS CE

22
PAP

FR
LE TRI
FACILE
Boîte 1 + Papier 5
BAC DE TRI

Séparez les éléments avant de trier

合格证
已检验

Made in China | 中国制造

RECICLA
Al Azul