SmallRig

240W Power Cable with LED Display

240W 数显充电线

EN Operating Instruction

CN 操作指引

DE Betriebsanweisungen

FR Instructions opérationnelles

IT Istruzioni per l'uso

ES Instrucciones operativas

PT Instruções de funcionamento

NL Gebruiksinstructies

SE Bruksanvisning

KR 운영 지침

Product Details / 产品介绍

DE Produkte

IT Descrizione del prodotto

PT Apresentação do Produto

SE Produktbeskrivning

FR Introduction du produit

ES Presentación del producto

NL Productinleiding

KR 제품 소개

LED Screen: Displays real-time power and port temperature.
LED屏幕：显示实时功率和端口温度

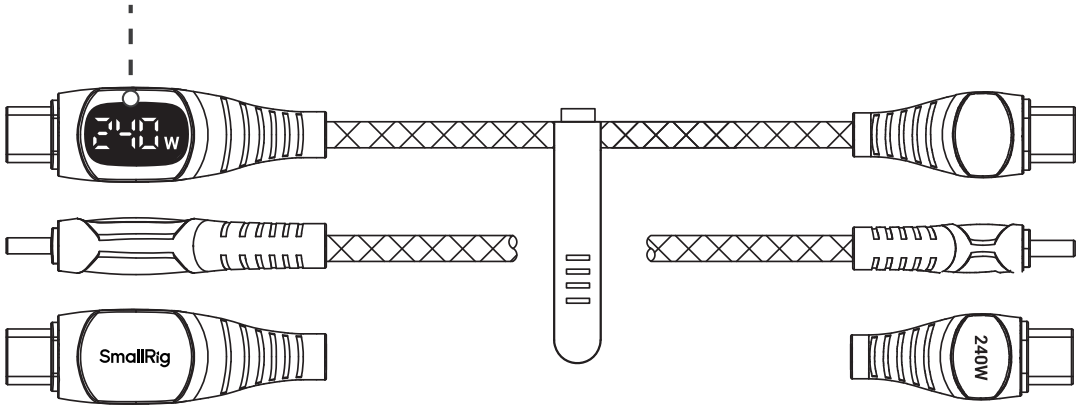

EN

Thank you for choosing SmallRig products.

Important Reminder

- Please keep the product dry and avoid contact with water or other liquids.
- Do not use the product in high temperature, humid, or dusty environments.
- Keep the product away from flammable materials and avoid prolonged use.
- If any damage is found on the product, please stop using it immediately and contact the after-sales service department for repair or replacement.

CN

感谢您购买 SmallRig 产品。

重要提示

- 请保持产品干燥，避免接触水或其他液体。
- 请勿在高温、潮湿或多尘的环境中使用产品。
- 请勿将产品置于易燃物品附近，并避免长时间使用。
- 若发现产品有任何损坏，请立即停止使用并联系售后服务部门进行维修或更换。

DE

Vielen Dank für den Kauf von SmallRig Produkten.

Wichtige Hinweise

- Bitte halten Sie das Produkt trocken und vermeiden Sie den Kontakt mit Wasser oder anderen Flüssigkeiten.
- Verwenden Sie das Produkt nicht in Umgebungen mit hoher Temperatur, Feuchtigkeit oder Staub.
- Halten Sie das Produkt weg von entflammbaren Materialien und vermeiden Sie die langandauernde Nutzung.
- Wenn Schäden am Produkt festgestellt werden, hören Sie sofort auf es zu verwenden und wenden Sie sich an den Service für Kundenservice für Reparatur oder Austausch.

FR

Merci d'avoir acheté un produit SmallRig.

Remarques importantes

- Veuillez garder le produit sec et éviter tout contact avec l'eau ou d'autres liquides.
- N'utilisez pas le produit dans des environnements à forte température, humides ou poussières.
- Tenez le produit à l'écart des matières inflammables et évitez une utilisation prolongée.
- Si des dommages sont détectés sur le produit, veuillez cesser son utilisation immédiatement et contacter le service après-vente pour une réparation ou un remplacement.

IT

Grazie per aver acquistato il prodotto di SmallRig.

Suggerimento importante

- Mantenete il prodotto asciutto e evitate il contatto con l'acqua o altri liquidi.
- Non utilizzare il prodotto in ambienti ad alta temperatura, umidi o polverosi.
- Tieni il prodotto lontano da materiali infiammabili e evita l'uso prolungato.
- Se si riscontrano danni sul prodotto, smettete immediatamente di utilizzarlo e contattate il reparto assistenza clienti per la riparazione o il cambio.

ES

Gracias por adquirir los productos de SmallRig.

Advertencia:

- Mantenga el producto seco y evite el contacto con agua u otros líquidos.
- No utilice el producto en ambientes de alta temperatura, humedad o polvo.
- Mantenga el producto alejado de materiales inflamables y evite el uso prolongado.
- Si nota cualquier daño en el producto, deje de usarlo de inmediato y comuníquese con el departamento de servicio postventa para la reparación o el reemplazo.

PT

Obrigado por escolher produto SmallRig.

Informações Importantes:

- Mantenha o produto seco e evite contato com água ou outros líquidos.
- Não use o produto em ambientes de alta temperatura, úmido ou poeirento.
- Mantenha o produto longe de materiais inflamáveis e evite o uso prolongado.
- Se detectar qualquer dano no produto, pare de usá-lo imediatamente e contate o departamento de serviço pós-venda para reparo ou substituição.

NL

Bedankt voor uw keuze voor SmallRig-producten.

Belangrijke herinnering

- Houd het product droog en vermeid contact met water of andere vloeistoffen.
- Gebruik het product niet in omgevingen met hoge temperaturen, vochtigheid of stof.
- Houd het product ver van brandbare materialen en vermeid langdurig gebruik.
- Als enige schade aan het product wordt geconstateerd, stop onmiddellijk met het gebruiken en neem contact op met de klantenservice voor reparatie of vervanging.

SE

Tack för att du väljer SmallRig-produkter.

Viktig påminnelse

- Håll produktet torrt och undvik kontakt med vatten eller andra vätskor.
- Använd inte produkten i miljöer med hög temperatur, fuktighet eller damm.
- Håll produktet borta från brandbara material och undvik långvarig användning.
- Om någon skada på produkten upptäckts, sluta omedelbart att använda det och kontakta kundtjänst för reparation eller ersättning.

EN

Specifications

Items	Parameters
Material(s)	TPE, Polyester Outer Braided Mesh
Input / Output	48V⎓5A; 240W (Max)
USB Protocol	USB2.0
USB Speed	480Mbps
Length	1.0m / 3.28ft
Weight	32.0g / 1.1oz

CN

产品参数

项目	规格
材质	TPE，涤纶外编织网
输入 / 输出	48V⎓5A; 240W (Max)
USB 传输协议	USB2.0
USB 传输速率	480Mbps
长度	1.0m
重量	32.0g

DE

Produktparameter

Artikel	Spezifikation
Material	TPE, Polyester Außengeflochtenes Netz
Eingang / Ausgang	48V⎓5A; 240W (Max)
USB-Transferprotokoll	USB2.0
USB-Übertragungsrate	480Mbps
Länge	1.0m / 3,28ft
Gewicht	32.0g / 1.1oz

FR

Paramètres du produit

Élément	Spécifications
Matériau	TPE, Maille extérieure tressée en polyester
Entrée / Sortie	48V⎓5A; 240W (Max)
Protocole de transfert USB	USB2.0
Taux de transfert USB	480Mbps
Longueur	1.0m / 3,28ft
Poids	32.0g / 1.1oz

IT

Parametri del prodotto

Progetto	Specifica
Materiale	TPE, Rete esterna intrecciata in poliestere
Entrata / Uscita	48V⎓5A; 240W (Max)
Protocollo di trasferimento USB	USB2.0
Velocità di trasferimento USB	480Mbps
Lunghezza	1.0m / 3,28ft
Peso	32.0g / 1,1oz

ES

Parámetros del producto

Artículo	Especificación
Material	TPE, Malla exterior trenzada de poliéster
Entrada / Salida	48V⎓5A; 240W (Max)
Protocolo de transferencia USB	USB2.0
Velocidad de transferencia USB	480Mbps
Lunghezza	1.0m / 3,28ft
Peso	32.0g / 1,1oz

PT

Specifications

Item	Especificação
Material	TPE, Malha externa trançada de poliéster
Entrada / Saída	48V⎓5A; 240W (Max)
Protocolo de transferência USB	USB2.0
Taxa de transferência USB	480Mbps
Comprimento	1.0m / 3,28ft
Peso	32.0g / 1,1oz

NL

Productparameters

Item	Specificaties
Materiaal	TPE, Polyester Buiten Gevlochten Net
Invoer / Uitvoer	48V⎓5A; 240W (Max)
USB-overdrachtprotocol	USB2.0
USB-overdrachtsnelheid	480Mbps
Lengte	1.0m / 3,28ft
Gewicht	32.0g / 1.1oz

SE

Productparameters

Punkt	Specifikation
Material	TPE, Polyester Yttre Flätad Mesh
Inmatning / Utmatning	48V⎓5A; 240W (Max)
USB-överföringsprotokoll	USB2.0
USB-överföringshastighet	480Mbps
Längd	1.0m / 3,28ft
Vikt	32.0g / 1.1oz

KR

규격 사양

프로젝트	규격
재질	TPE, 폴리에스터 외부 꼬임망
입력 / 출력	48V⎓5A; 240W（Max）
USB 전송 프로토콜	USB2.0
USB 전송 속도	480Mbps
길이	1.0m / 3.28ft
무게	32.0g / 1.1oz

Service & Warranty

Please keep your original receipt and guarantee card. Be sure the dealer has written on it the date of purchase and SN of the product. These are required for warranty service.

After-sale Warranty Terms

SmallRig products are entitled to warranty services as of the date of payment.

• Electronic products (except V mount battery): 1-year warranty.
• V mount battery: 2-year warranty.
• Non-electronic products: 2-year warranty.

Note: In case of any conflict between our warranty period policy and applicable laws and regulations of the country / region where the products are sold, the latter shall prevail.

This Warranty Does Not Cover

1. If users fail to adhere to the "Operating Instruction" or any "Warnings" stated in the user manual, resulting in a quality failure, it falls outside the scope of warranty coverage.
2. The product identification or SN label is removed or defaced in any way.
3. Product damage caused by problems not attributable to the quality of the products such as improper use of the products.
4. Product damage caused by unauthorized modification, disassembly, repair and other acts.
5. Product damage caused by fires, floods, lightning and other force majeure factors.

Warranty Mode

• For the products within the scope of warranty, SmallRig will repair or replace them on the basis of specific failures; the repaired / replaced products / parts are entitled to the remaining part of the original warranty period.

Contact Information

• You're advised to contact the online customer service personnel of corresponding shopping platform and submit a repair service application.
• You may also apply for repair service through SmallRig's service email.

Service Email: support@smallrig.com

保修条款

请保留您的原始购买单据及保修卡,同时包含您的购买日期、产品序列号等,这些资料质保服务时均需要提供。

售后质保条款

SmallRig产品自下单付款之日起享有质保服务。

·电子产品(除V口电池): 1年质保。

·V口电池: 2年质保。

·非电子产品: 2年质保。

注 : 若销售地国家或地区的适用法律法规有冲突的, 以销售地国家或地区有关质保期的法律法规为准。

质保无效说明

1. 当用户违反操作指引或用户手册中“重要提示”任何一条导致的质量失效,不在质保范围内。
2. 产品序列号标识已经被撕毁或无法辨识,不在质保范围。
3. 产品使用不当等非产品本身质量问题,而造成的产品损坏,不在质保范围。
4. 非官方指导的私自改装、拆解、维修等行为而造成的损坏,不在质保范围。
5. 因火灾、水灾、雷击等不可抗拒力造成的产品损坏,不在质保范围。

维修方式

• 属于质保范围的,SmallRig 根据产品具体的故障对产品进行维修或更换;维修后的产品 / 部件享受原有保修期的剩余时长。

联系方式

• 建议您优先前往相应购买平台联系在线客服,提出产品维修申请。

• 您也可以通过 SmallRig 服务邮箱申请维修服务。

服务邮箱:support@smallrig.com

Guarantee Card / 保修卡

ID No. ID 编号	
Item Name 产品名称	
Purchase Date 购买日期	
User Name 用户姓名	
Mobile 用户电话	
Address 用户地址	
Receipt 购买单据	

Manufacturer Email: support@smallrig.com
Manufacturer: Shenzhen Leqi Innovation Co., Ltd.
制造商: 深圳市乐其创新股份有限公司
Add: Rooms 101, 701, 901, Building 4, Gonglianfuji Innovation Park, No. 58, Ping'an Road, Dafu Community, Guanlan Street, Longhua District, Shenzhen, Guangdong, China.
地址: 中国广东省深圳市龙华区观澜街道大富社区平安路58号共联富基创新园4栋101、701、901

Consignor: Shenzhen LC Co., Ltd.
委托商： 深圳市乐长科技有限公司
Add: Room 201, Building 4, Gonglianfuji Innovation Park, No. 58, Ping'an Road, Dafu Community, Guanlan Street, Longhua District, Shenzhen, Guangdong, China.
地址: 中国广东省深圳市龙华区观澜街道大富社区平安路58号共联富基创新园4栋201

EC	REP

GAVIMOSA CONSULTORIA, SOCIEDAD LIMITADA,
CASTELLANA 9144, 28046 Madrid,
compliance.gavimosa@outlook.com

UK	REP

Sea&Mew Accounting Ltd,
Electric Avenue Vision 25, London, Enfield EN3 7GD,
info@seamew.net

执行标准：GB/T 26572-2011

Points de collecte sur www.quefairedemesdechets.fr
Privilégiez la réparation ou le don de votre appareil !

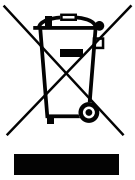

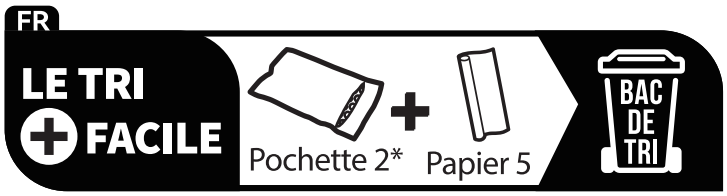

Séparez les éléments avant de trier

Made in China

中国制造

WE ARE HERE FOR YOU
服务与支持

ETICHETTATURA AMBIENTALE
ENVIRONMENTAL LABELING

LQ-P1443-18